Inhoudsopgave

EPN automaten behuizingen

Hermetica IP65
(blz. 3)
3 t/m 24 modules

Economic box IP40
(blz. 9)
6 t/m 36 modules

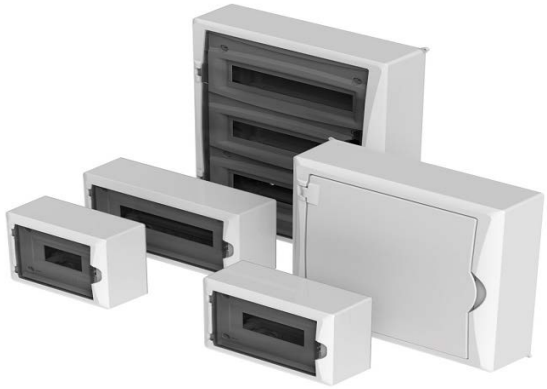

Elegant IP40
(blz. 17)
5 t/m 54 modules

Galant plus IP65
(blz. 25)
18 t/m 72 modules

EP-LUX Plus IP55/65
(blz. 31)
6 t/m 72 modules

Mikro/Mini IP20/30
(blz. 37)
2 t/m 6 modules

Meriva IP40
(blz. 42)
12 t/m 36 modules

MSF (inbouw) IP30
(blz. 49)
Modules: 12 t/m 48

VIFA enclosures

Enclosures hermetic
HERMETICA™ IP65

VIFA enclosures

epn ELEKTRO-PLAST NASIELSK

ENCLOSURES HERMETIC HERMETICA IP65

Protection degree	IP 65
Material	CASING:ABS/Door:PC
Impact resistance	IK 08
Protection class	II
Color	RAL 7035(light gray)
Rated voltage	AC 440V/50Hz
Thermal condition	-20°C+70°C
Thermal test	70°C
Norm	PN-EN 61439-3:2012, PN-EN 61439-1:2011

1x3
2201-01

1x4
2202-01

1x6
2203-01

1x8+2
2204-01

1x12+1 (13-mod)
2207-01

1x12+4 (16-mod)
2208-01

2x12+2
2209-01

1x10
2205-01

1x13
2206-01

- Max MCB's height till 52 mm,
- included DIN rail,
- 3 and 4 mod casing one of the smallest at market,
- walls with knockout holes PG,
- possibility sealing window and enclosure,
- impact resistance,
- window regulation position stages: open and half open,
- individual equipment configuration into bigger enclosures,
- solid construction (thicker walls).

ENCLOSURES HERMETIC HERMETICA IP65

Door w Colorze Transp.m
z możliwością plombowania

Machine sealing under door and
upper cover

Large space for cabling

rigid construction IK08

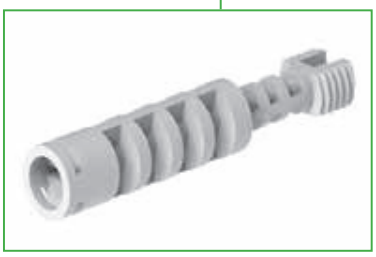

screw with sealing

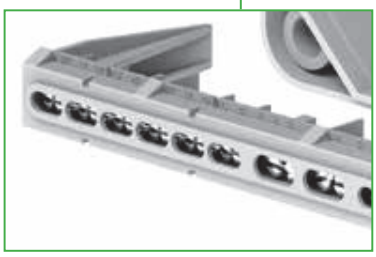

optional terminal bars PE+N

weaknesses for cable glands

IP 65

IP 65 UV IK 08 400 V ABS PC

HERMETICA RN 1x3 IP65

Type	Color	Pack. 1 pc.	Weight kg/1 pc.	Index
RN-1x3	Gray RAL 7035	1		**2201-01**

Dimensions:135x74x97 mm
N terminal included.

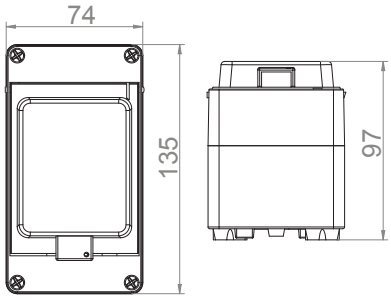

IP 65 UV IK 08 400 V ABS PC

HERMETICA RN 1x4 IP65

Type	Color	Pack. 1 pc.	Weight kg/1 pc.	Index
RN-1x4	Gray RAL 7035	1		**2202-01**

Dimensions:170x105x111 mm
N terminal included.

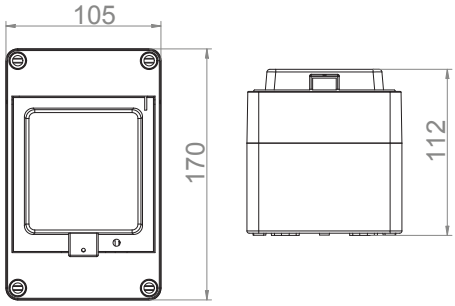

IP 65 UV IK 08 400 V ABS PC

HERMETICA RN 1x6 IP65

Type	Color	Pack. 1 pc.	Weight kg/1 pc.	Index
RN-1x6	Gray RAL 7035	1		**2203-01**

Dimensions:170x135x112 mm
N terminal included.

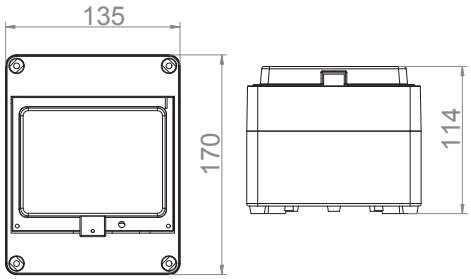

IP 65 UV IK 08 400 V ABS PC

HERMETICA RN 1x8+2 IP65

Type	Color	Pack. 1 pc.	Weight kg/1 pc.	Index
RN-1x8+2	Gray RAL 7035	1		**2204-01**

Dimensions:168x220x112,5 mm
Terminal blocks included
N 2x(1-10)mm² + 3x(1-16)mm²
PE 2x(1-10)mm² + 3x(1-16)mm²)

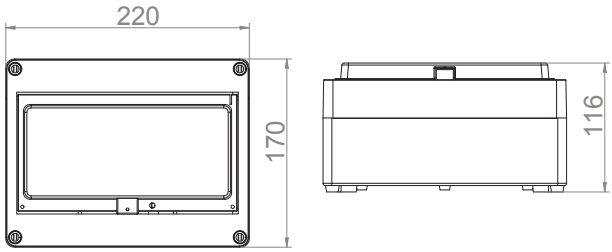

IP 65 UV IK 08 400 V ABS PC

HERMETICA RN 1x12+1 IP65

Type	Color	Pack. 1 pc.	Weight kg/1 pc.	Index
RN-1x12+1	Gray RAL 7035	1		**2207-01**

Dimensions:220x270x120 mm
Terminal blocks included
N 5x(1-10)mm² + 2x(1-16)mm²
PE 5x(1-10)mm² + 2x(1-16)mm²

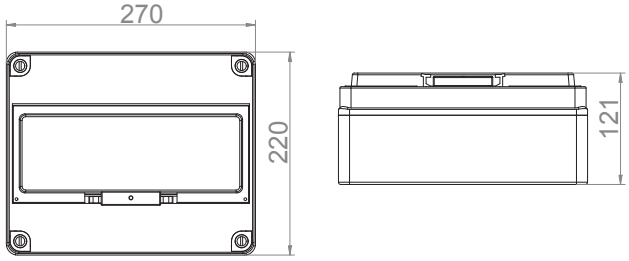

IP 65 UV IK 08 400 V ABS PC

HERMETICA RN 1x12+4 IP65

Type	Color	Pack. 1 pc.	Weight kg/1 pc.	Index
RN-1x12+4	Gray RAL 7035	1		**2208-01**

Dimensions:270x340x138 mm
Terminal blocks included
N 12x(1-10)mm² + 2x(1-16)mm²
PE 12x(1-10)mm² + 2x(1-16)mm²

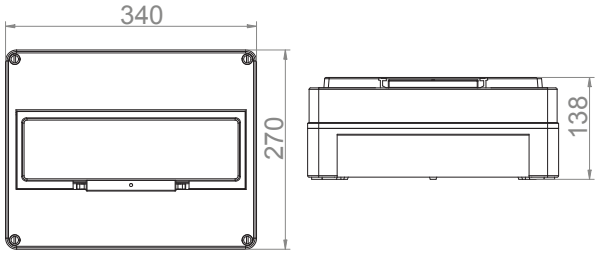

IP 65 UV IK 08 400 V ABS PC

HERMETICA RN 2x12+2 IP65

Type	Color	Pack. 1 pc.	Weight kg/1 pc.	Index
RN-2x12+2	Gray RAL 7035	1		**2209-01**

Dimensions:340x270x119,5 mm
Terminal blocks included
N 12x(1-10)mm² + 2x(1-16)mm²
PE 12x(1-10)mm² + 2x(1-16)mm²

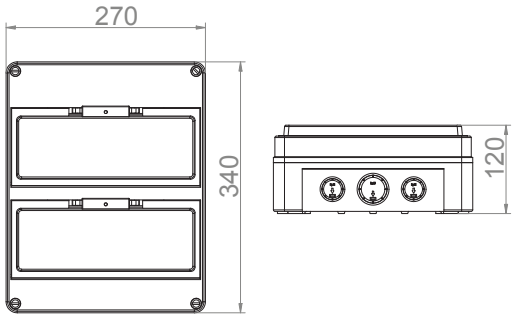

IP 65 UV IK 08 400 V ABS PC

HERMETICA RN 1x10 IP65

Type	Color	Pack. 1 pc.	Weight kg/1 pc.	Index
RN-1x10	Gray RAL 7035	1		**2205-01**

Dimensions:270x220x120 mm

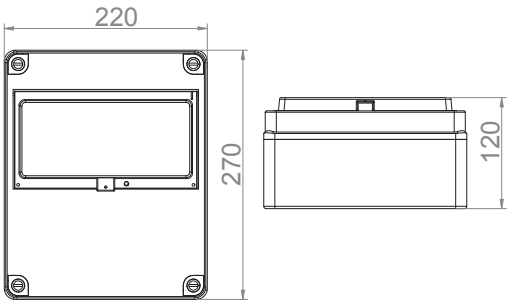

IP 65 UV IK 08 400 V ABS PC

HERMETICA RN 1x13 IP65

Type	Color	Pack. 1 pc.	Weight kg/1 pc.	Index
RN-1x13	Gray RAL 7035	1		**2206-01**

Dimensions:340x270x119,5 mm

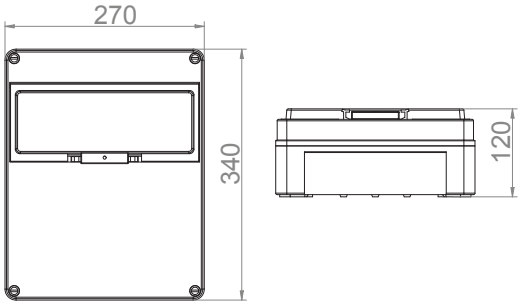

Residential/investment enclosures

ECONOMIC BOX™

VIFA enclosures

epn ELEKTRO-PLAST NASIELSK

Protection degree	IP 40
Material Door/Casing	ABS / PS
Impact resistance	IK 05
Thermal condition	-20°C +70°C
Thermal test	70°C
Norm	PN-EN 61439-3:2012, PN-EN 61439-1:2011, IEC/EN 60670-24

1x6-mod.
2501-01

1x8-mod.
2502-01

1x12-mod.
2503-01

2x12-mod.
2505-00

2x12-mod.
2505-21 MULTI-MEDIA

3x12-mod.
2506-01

- Degree protection IP 40
- protection class II
- range 1 to 3 row
- 6, 8, 12, 24, 36 – mod.
- standard included terminal bars PE + N
- 2 colours doors available
- key lock option

Casing white color RAL 9003

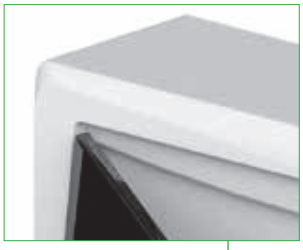

Terminal bars PE+N included

Sealing option

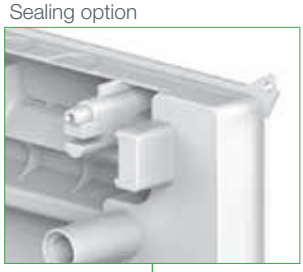

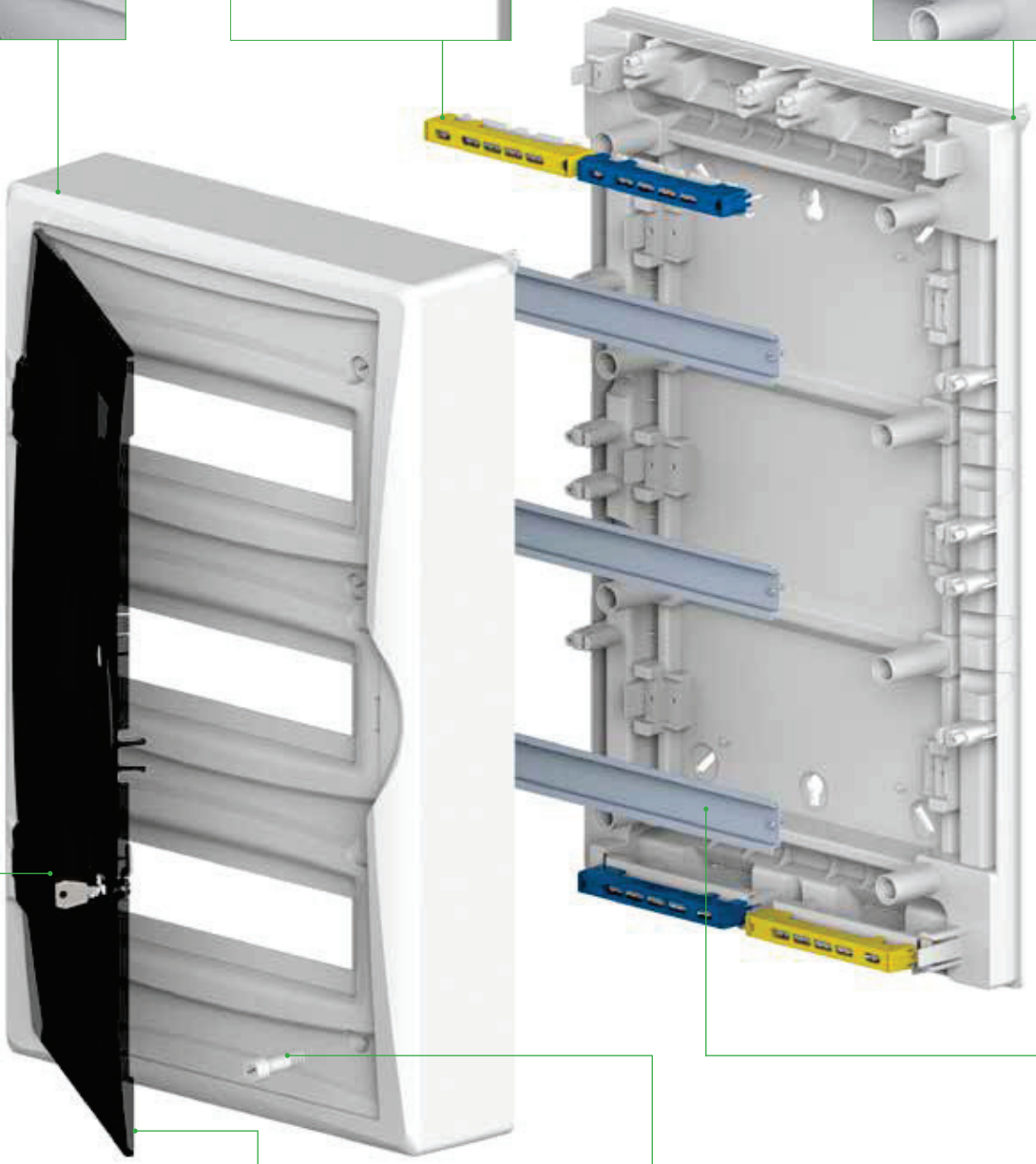

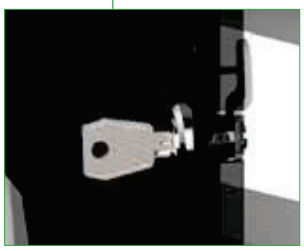

Key lock option

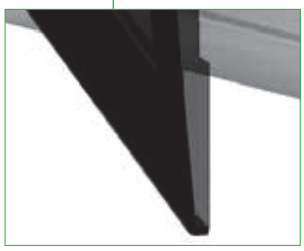

Transparent door or door the same colour as casing

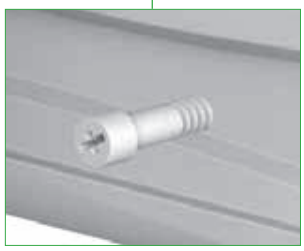

New screw

New metal rail TS since 12mod

IP 40 IK 05 400 V PS

ECONOMIC BOX™ RN 1x6 IP 40 (PE+N)

Rows / modu-les	Type	Doors color	Term. PE+N	Pack. 1 pc.	Weight kg/1 pc.	Index old	Index new
1x6	RN 1x6	White	yes	1	0,3	**0606-00**	**2501-00**
1x6	RN 1x6	Transp.	yes	1	0,3	**0606-01**	**2501-01**

Protection degree IP 40, rated voltage 400V
Terminal blocks included
N 1x(3x10 mm² + 2x16 mm²)
PE 1x(3x10 mm² + 2x16 mm²)
NORM: PN-EN 61439-3:2012, PN-EN 61439-1:2011
Dimensions: 192x198x96 mm

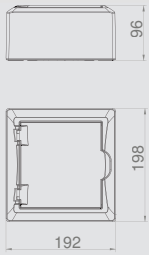

IP 40 IK 05 400 V PS

ECONOMIC BOX™ RN 1x8 IP 40 (PE+N)

Rows / modules	Type	Doors color	Term. PE+N	Pack. 1 pc.	Weight kg/1 pc.	Index old	Index new
1x8	RN 1x8	White	yes	1	0,45	**0614-00**	**2502-00**
1x8	RN 1x8	Transp.	yes	1	0,45	**0614-01**	**2502-01**

Protection degree IP 40, rated voltage 400V
Terminal blocks included
N 1x(5x10 mm² + 2x16 mm²)
PE 1x(5x10 mm² + 2x16 mm²)
NORM: PN-EN 61439-3:2012, PN-EN 61439-1:2011
Dimensions: 228x198x96 mm

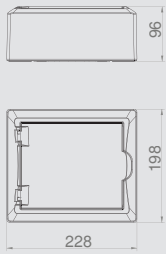

IP 40 IK 05 400 V PS

ECONOMIC BOX™ RN 1x12 IP 40 (PE+N)

Rows / modu-les	Type	Doors color	Term. PE+N	Pack. 1 pc.	Weight kg/1 pc.	Index old	Index new
1x12	RN 1x12	White	yes	1	0,76	**0640-00**	**2503-00**
1x12	RN 1x12	Transp.	yes	1	0,76	**0640-01**	**2503-01**

Protection degree IP 40, rated voltage 400V
Terminal blocks included
N 1x(3x10 mm² + 6x16 mm²)
PE 1x(3x10 mm² + 6x16 mm²)
NORM: PN-EN 61439-3:2012, PN-EN 61439-1:2011
Dimensions: 298x198x96 mm

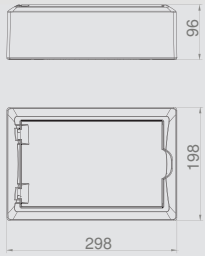

IP 40 IK 05 400 V PS

ECONOMIC BOX™ RN 2x12 IP 40 (PE+N)

Rows / modu-les	Type	Doors color	Term. PE+N	Pack. 1 pc.	Weight kg/1 pc.	Index old	Index new
2x12	RN 2x12	White	yes	1	2,00	**0608-00**	**2505-00**
2x12	RN 2x12	Transp.	yes	1	2,00	**0608-01**	**2505-01**

Protection degree IP 40, rated voltage 400V
Terminal blocks included
N 2x(3x10 mm² + 6x16 mm²)
PE 1x(3x10 mm² + 6x16 mm²)
NORM: PN-EN 61439-3:2012, PN-EN 61439-1:2011
Dimensions: 354x434x105 mm

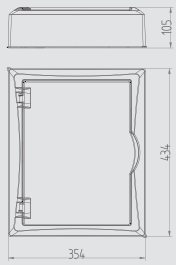

IP 40 IK 05 400 V PS

ECONOMIC BOX™ RN 3x12 IP 40 (PE+N)

Rows / modu-les	Type	Doors color	Term. PE+N	Pack. 1 pc.	Weight kg/1 pc.	Index old	Index new
3x12	RN 3x12	White	yes	1	3,0	**0610-00**	**2506-00**
3x12	RN 3x12	Transp.	yes	1	3,0	**0610-01**	**2506-01**

Protection degree IP 40, rated voltage 400V
Terminal blocks included
N 2x(3x10 mm² + 6x16 mm²)
PE 2x(3x10 mm² + 6x16 mm²)
NORM: PN-EN 61439-3:2012, PN-EN 61439-1:2011
Dimensions: 354x560x107 mm

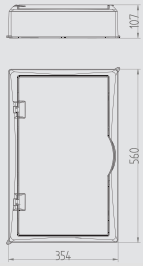

IP 40 IK 05 400 V PS

ECONOMIC BOX™ MULTIMEDIA RN 2x12

Type	Color Door	Pack. 1 pc.	Weight kg/1 pc.	Index new
RN 2/24	White	1	2	**2505-20**
RN 2/24	Transp.	1	2	**2505-21**

Protection degree IP 40, napięcie znamionowe 400V
It includes socket 2P+Z 16A/250V NORM: PN-IEC-60884-1,
rail TS 35 – 1pc,
mounting plate with holes for mounting devices: NORM:IEC/EN 60670-24
Dimensions: 360x434x105 mm

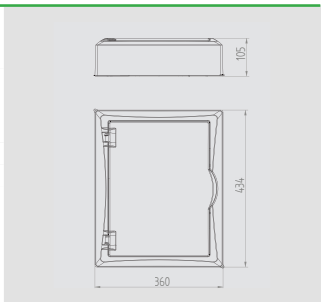

IP 40 IK 05 400 V PS

ECONOMIC BOX™ MULTIMEDIA RN 3x12

Type	Color Door	Pack. 1 pc.	Weight kg/1 pc.	Index new
RN 3/36	White	1	3	**2506-20**
RN 3/36	Transp.	1	3	**2506-21**

Protection degreeIP 40, napięcie znamionowe 400V
It includes socket 2P+Z 16A/250V NORM: PN-IEC-60884-1,
rail TS 35 – 1pc,
mounting plate with holes for mounting devices: NORM:IEC/EN 60670-24
Dimensions: 354x560x107 mm

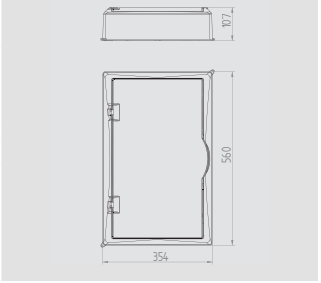

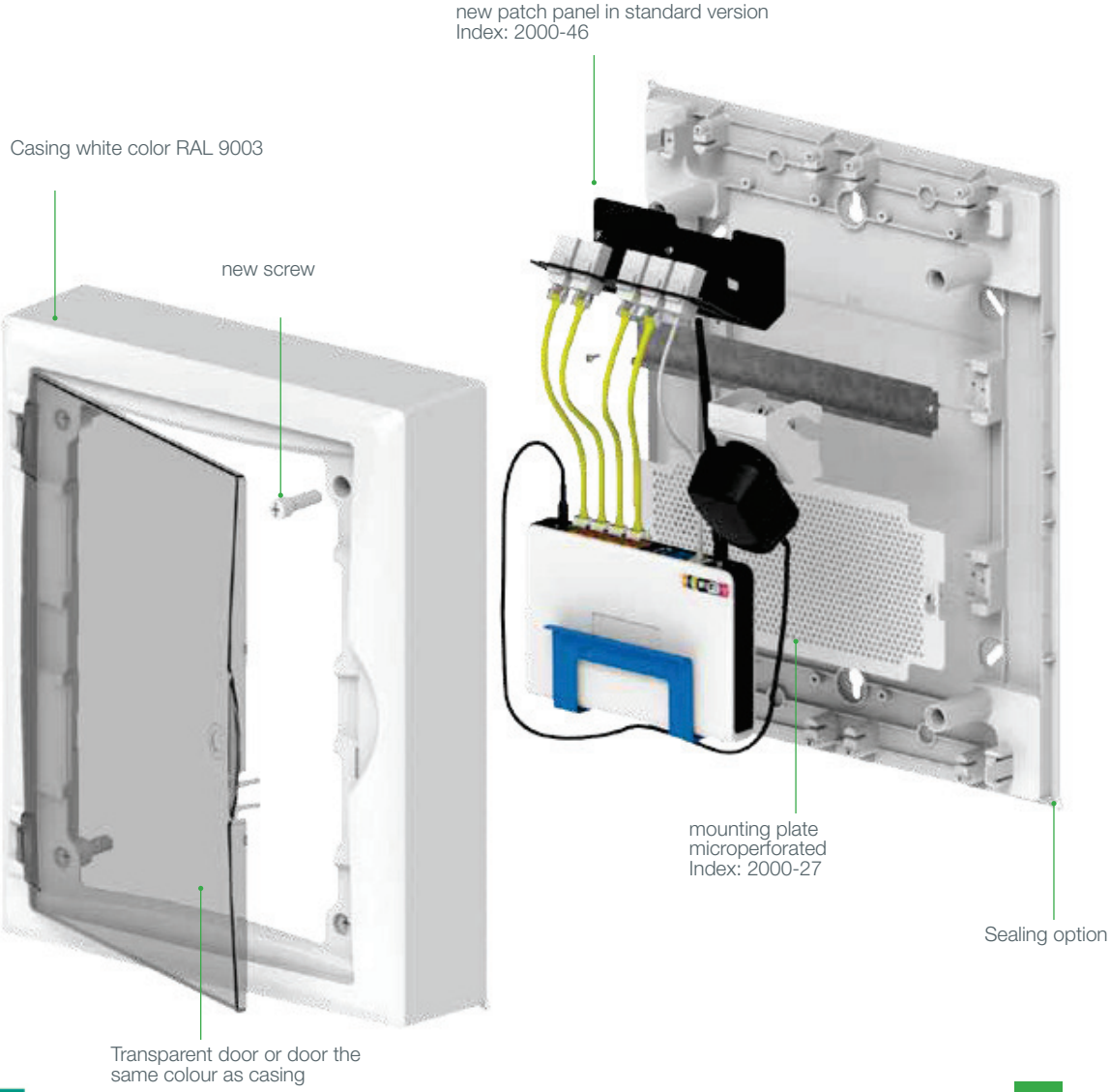

Protection degree	IP 40
Material Door/Cover/Base	PC/PS/PP FR
Impact resistance	IK 05
Thermal condition	-20°C +70°C
Thermal test	70°C
Norm	PN-EN 61439-3:2012, PN-EN 61439-1:2011, IEC/EN 60670-24

1x6-mod.
2511-01

1x8-mod.
2512-01

1x12-mod.
2513-01

2x12-mod.
2515-01

3x12-mod.
2516-01

PRODUKT POLSKI

- Degree protection IP 40
- protection class II
- range 1 to 3 rows
- 6, 8, 12, 24, 36 – mod.
- standard included terminal bars PE + N
- 2 colours doors available
- modern design
- key lock option

Casing white color RAL 9003

Hardened steel screws for fast and solid assembly

Termina bars PE+E

Rigid casing flush mounted version

Key lock option

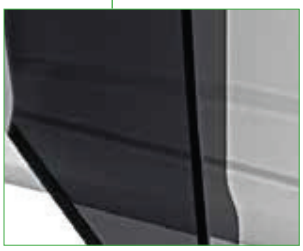

Doors color Transp.

Metal TS rail

IP 40 IK 05 400 V PS

ECONOMIC BOX™ RP 1x6 IP 40 (PE+N)

Rows / modu-les	Type	Color Door	Term. PE+N	Pack. 1 pc.	Weight kg/1 pc.	Index old	Index new
1/6	RP 1x6	White*	yes	1	0,6	**0680-00**	**2511-00**
1/6	RP 1x6	Transp.	yes	1	0,6	**0680-01**	**2511-01**

Protection degree IP 40, rated voltage 400V
Terminal blocks included
N 1x(3x10 mm² + 2x16 mm²)
PE 1x(3x10 mm² + 2x16 mm²)
NORM: PN-EN 61439-3:2012, PN-EN 61439-1:2011
Dimensions: 270x240x106 mm

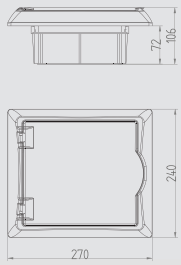

IP 40 IK 05 400 V PS

ECONOMIC BOX™ RP 1x8 IP 40 (PE+N)

Rows / modules	Type	Color Door	Term. PE+N	Pack. 1 pc.	Weight kg/1 pc.	Index old	Index new
1/8	RP 1x8	White*	yes	1	0,7	**0681-00**	**2512-00**
1/8	RP 1x8	Transp.	yes	1	0,7	**0681-01**	**2512-01**

Protection degree IP 40, rated voltage 400V
Terminal blocks included
N 1x(5x10 mm² + 2x16 mm²)
PE 1x(5x10 mm² + 2x16 mm²)
NORM: PN-EN 61439-3:2012, PN-EN 61439-1:2011
Dimensions: 300x240x102 mm

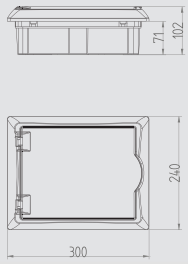

IP 40 IK 05 400 V PS

ECONOMIC BOX™ RP 1x12 IP 40 (PE+N)

Rows / modu-les	Type	Color Door	Term. PE+N	Pack. 1 pc.	Weight kg/1 pc.	Index old	Index new
1/12	RP 1x12	White*	yes	1	1,1	**0682-00**	**2513-00**
1/12	RP 1x12	Transp.	yes	1	1,1	**0682-01**	**2513-01**

Protection degree IP 40, rated voltage 400V
Terminal blocks included
N 1x(7x10 mm² + 2x16 mm²)
PE 1x(7x10 mm² + 2x16 mm²)
NORM: PN-EN 61439-3:2012, PN-EN 61439-1:2011
Dimensions: 360x240x106 mm

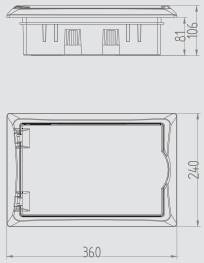

IP 40 IK 05 400 V PS

ECONOMIC BOX™ RP 2x12 IP 40 (PE+N)

Rows / modu-les	Type	Color Door	Term. PE+N	Pack. 1 pc.	Weight kg/1 pc.	Index old	Index new
2/12	RP 2x12	White	yes	1	1,6	**0684-00**	**2515-00**
2/12	RP 2x12	Transp.	yes	1	1,6	**0684-01**	**2515-01**

Protection degree IP 40, rated voltage 400V
Terminal blocks included
N 2x(7x10 mm² + 2x16 mm²)
PE 1x(7x10 mm² + 2x16 mm²)
NORM: PN-EN 61439-3:2012, PN-EN 61439-1:2011
Dimensions: 350x430x95 mm

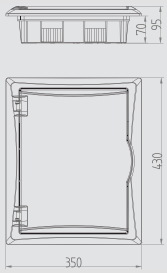

IP 40 IK 05 400 V PS

ECONOMIC BOX™ RP 3x12 IP 40 (PE+N)

Rows / modules	Type	Color Door	Term. PE+N	Pack. 1 pc.	Weight kg/1 pc.	Index old	Index
3/12	RP 3x12	White	yes	1	2,4	**0685-00**	**2516-00**
3/12	RP 3x12	Transp.	yes	1	2,4	**0685-01**	**2516-01**

Protection degree IP 40, rated voltage 400V
Terminal blocks included
N 2x(7x10 mm² + 2x16 mm²)
PE 2x(7x10 mm² + 2x16 mm²)
NORM: PN-EN 61439-3:2012, PN-EN 61439-1:2011
Dimensions: 350x560x102 mm

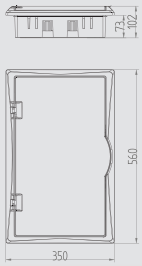

Enclosures

ELEGANT IP 40

Protection degree	IP 40
Material	PS
Impact resistance	IK 05
Thermal condition	-20°C +70°C
Thermal test	70°C
Norm	PN-EN 61439-3:2012 PN-EN 61439-1:2011

1x5-mod.
2401-01

1x8-mod.
2402-01

1x12-mod.
2403-01

1x18-mod.
2404-01

2x12-mod.
2405-01

2x18-mod.
2407-01

3x12-mod.
2406-01

3x18-mod.
2408-01

White doors on individual order. Index -00

- degree protection IP 40
- protection class II
- 1 to 3 rows
- 5, 8, 12, 18, 24, 36, 54 – mod.
- standard included terminal bars PE + N
- possibility sealing casing
- series 12 and 18 mod into row

Casing white RAL 9003

standard included terminal bars
PE + N

Sealing possibility casings.

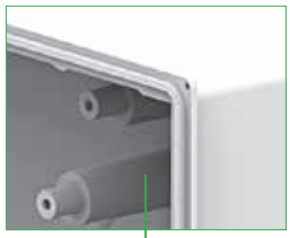

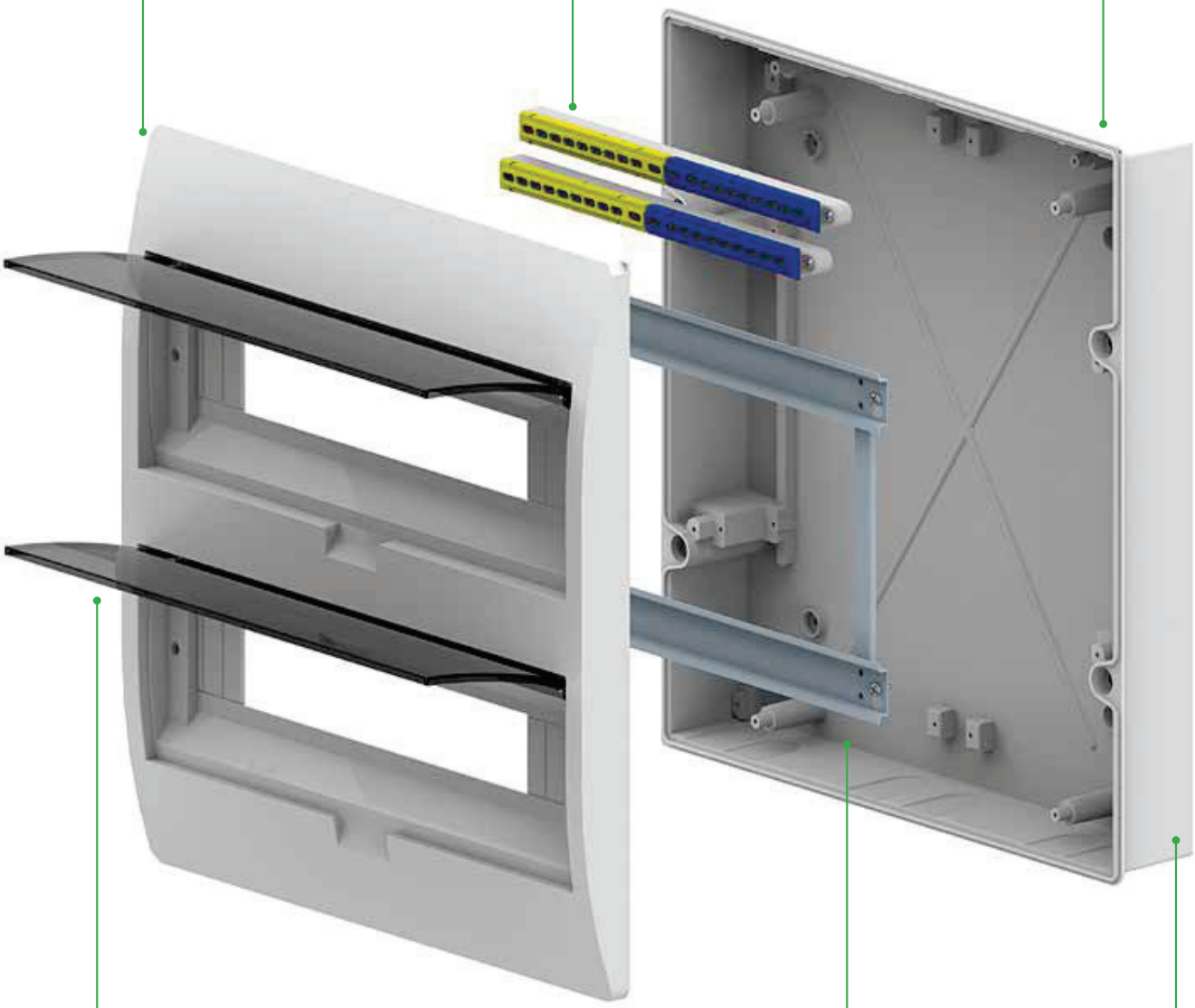

Doors color
Transp.

Possibility of flexible
utilities and cabling

rigid casing

IP 40 IK 05 400 V PS

ELEGANT RN 1x5 IP 40

Rows / modules	Type	Doors color	Term. PE+N	Pack. 1 pc.	Weight kg/1 pc.	Index new
1/5	RN 1x5	Transp.	yes	3	0,3	**2401-01**

Protection degree IP 40, rated voltage 400V. Sealing possibility casings.
Terminal blocks included
Terminal plate 1x10mm²
NORM: PN-EN 61439-3:2012, PN-EN 61439-1:2011
Dimensions: 116x156x98 mm

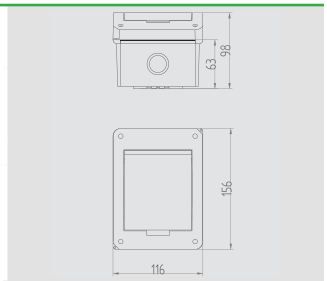

IP 40 IK 05 400 V PS

ELEGANT RN 1x8 IP 40 (PE+N)

Rows / modules	Type	Doors color	Term. PE+N	Pack. 1 pc.	Weight kg/1 pc.	Index new
1/8	RN 1x8	Transp.	yes	1	0,55	**2402-01**

Protection degree IP 40, rated voltage 400V. Sealing possibility casings.
Terminal blocks included
N 1x(5x10mm² + 2x16mm²)
PE 1x(5x10mm² + 2x16mm²)
NORM: PN-EN 61439-3:2012, PN-EN 61439-1:2011
Dimensions: 195x195x98 mm

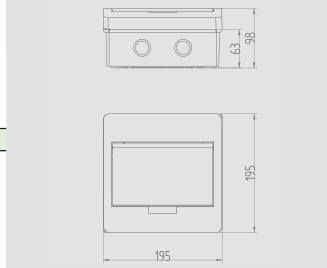

IP 40 IK 05 400 V PS

ELEGANT RN 1x12 IP 40 (PE+N)

Rows / modules	Type	Doors color	Term. PE+N	Pack. 1 pc.	Weight kg/1 pc.	Index new
1/12	RN 1x12	Transp.	yes	1	0,92	**2403-01**
1/12	RN 1x12	White	yes	1	0,92	**2403-00**

Protection degree IP 40, rated voltage 400V. Sealing possibility casings.
Terminal blocks included
N 1x(3x10 mm² + 6x16 mm²)
PE 1x(3x10 mm² + 6x16 mm²)
NORM: PN-EN 61439-3:2012, PN-EN 61439-1:2011
Dimensions: 303x212x98 mm

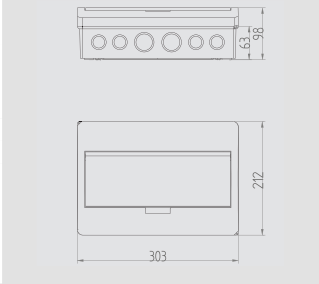

IP 40 IK 05 400 V PS NEW

ELEGANT RN 1x12 IP 40 (PE+N) NEW VERSION

Rows / modules	Type	Doors color	Term. PE+N	Pack. 1 pc.	Weight kg/1 pc.	Index new
1/12	RN 1x12	Transp.	yes	1	1,1	**2423-01**
1/12	RN 1x12	White	yes	1	1,1	**2423-00**

Protection degree IP 40, rated voltage 400V. Sealing possibility casings.
Terminal blocks included
N 1x(3x10 mm² + 6x16 mm²)
PE 1x(3x10 mm² + 6x16 mm²)
NORM: PN-EN 61439-3:2012, PN-EN 61439-1:2011
Dimensions: 298x198x96 mm

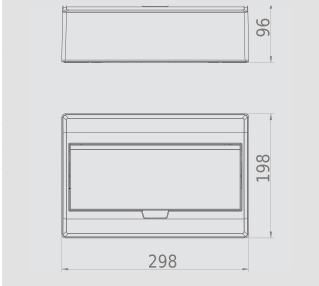

IP 40 IK 05 400 V PS

ELEGANT RN 1x18 IP 40 (PE+N)

Rows / modules	Type	Doors color	Term. PE+N	Pack. 1 pc.	Weight kg/1 pc.	Index new
1/18	RN 1x18	Transp.	yes	1	1,32	**2404-01**
1/18	RN 1x18	White	yes	1	1,32	**2404-00**

Protection degree IP 40, rated voltage 400V. Sealing possibility casings.
Terminal blocks included
N 1x(12x10 mm² + 2x16 mm²)
PE 1x(12x10 mm² + 2x16 mm²)
NORM: PN-EN 61439-3:2012, PN-EN 61439-1:2011
Dimensions: 406x260x98 mm

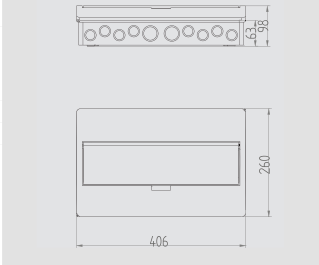

IP 40 IK 05 400 V PS

ELEGANT RN 2x12 IP 40 (PE+N)

Rows / modules	Type	Doors color	Term. PE+N	Pack. 1 pc.	Weight kg/1 pc.	Index new
2/12	RN 2x12	Transp.	yes	1	1,55	**2405-01**
2/12	RN 2x12	White	yes	1	1,55	**2405-00**

Protection degree IP 40, rated voltage 400V. Sealing possibility casings.
Terminal blocks included
N 2x(3x10 mm² + 6x16 mm²)
PE 1x(3x10 mm² + 6x16 mm²)
NORM: PN-EN 61439-3:2012, PN-EN 61439-1:2011
Dimensions: 303x407x98 mm

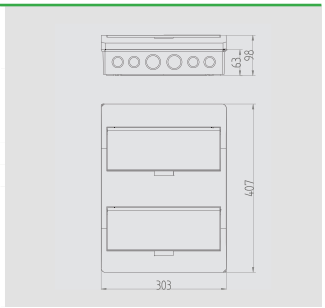

IP 40 IK 05 400 V PS

ELEGANT RN 2x18 IP 40 (PE+N)

Rows / modules	Type	Doors color	Term. PE+N	Pack. 1 pc.	Weight kg/1 pc.	Index new
2/18	RN 2x18	Transp.	yes	1	2,2	**2407-01**
2/18	RN 2x18	White	yes	1	2,2	**2407-00**

Protection degree IP 40, rated voltage 400V.
Sealing possibility casings.
Terminal blocks included
N 2x(6x10 mm² + 8x16 mm²)
PE 1x(6x10 mm² + 8x16 mm²)
NORM: PN-EN 61439-3:2012, PN-EN 61439-1:2011
Dimensions: 410x420x98 mm

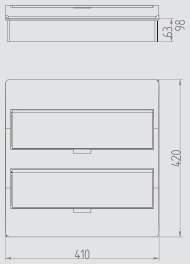

IP 40 IK 05 400 V PS

ELEGANT RN 3x12 IP 40 (PE+N)

Rows / modules	Type	Color Door	Term. PE+N	Pack. 1 pc.	Weight kg/1 pc.	Index new
3/12	RN 3x12	Transp.	yes	1	2,2	**2406-01**
3/12	RN 3x12	White	yes	1	2,2	**2406-00**

Protection degree IP 40, rated voltage 400V.
Sealing possibility casings.
Terminal blocks included
N 2x(7x10 mm² + 2x16 mm²)
PE 2x(7x10 mm² + 2x16 mm²)
NORM: PN-EN 61439-3:2012, PN-EN 61439-1:2011
Dimensions: 303x550x98 mm

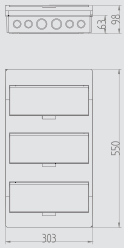

IP 40 IK 05 400 V PS

ELEGANT RN 3x18 IP 40 (PE+N)

Rows / modules	Type	Doors color	Term. PE+N	Pack. 1 pc.	Weight kg/1 pc.	Index new
3/18	RN 3x18	Transp.	yes	1	3,0	**2408-01**
3/18	RN 3x18	White	yes	1	3,0	**2408-00**

Protection degree IP 40, rated voltage 400V.
Sealing possibility casings.
Terminal blocks included
N 2x(12x10 mm² + 2x16 mm²)
PE 2x(12x10 mm² + 2x16 mm²)
NORM: PN-EN 61439-3:2012, PN-EN 61439-1:2011
Dimensions: 410x784x98 mm

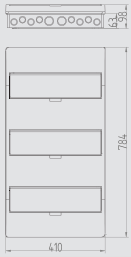

ENCLOSURE ELEGANT IP40 FOR INDIVIDUAL ORDER

IP 40 IK 05 400 V PS

ELEGANT RN 1x8 (PE+N) IP 40

Rows / modu-les	Type	Doors color	Color casing	Term. PE+N	Pack. 1 pc.	Weight kg/1 pc.	Index new
1/8	RN 1x8	Transp.	Cream RAL 1015*	yes	1	0,55	**2402-03**

Protection degree IP 40, rated voltage 400V. Sealing possibility casings.
Terminal blocks included
N 1x(5x10mm² + 2x16mm²)
PE 1x(5x10mm² + 2x16mm²)
NORM: PN-EN 61439-3:2012, PN-EN 61439-1:2011
Dimensions: 195x195x98 mm

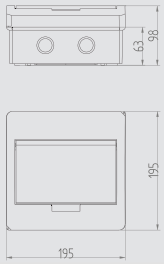

IP 40 IK 05 400 V PS

ELEGANT RN 1x8 (PE+N) IP 40

Rows / modu-les	Type	Doors color	Color casing	Term. PE+N	Pack. 1 pc.	Weight kg/1 pc.	Index new
1/8	RN 1x8	Transp.	Brown RAL 8028*	yes	1	0,55	**2402-05**

Protection degree IP 40, rated voltage 400V. Sealing possibility casings.
Terminal blocks included
N 1x(5x10mm² + 2x16mm²)
PE 1x(5x10mm² + 2x16mm²)
NORM: PN-EN 61439-3:2012, PN-EN 61439-1:2011
Dimensions: 195x195x98 mm

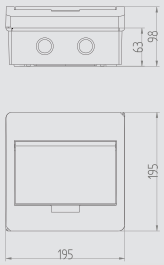

IP 40 IK 05 400 V PS

ELEGANT RN 1x8 (PE+N) IP 40

Rows / modu-les	Type	Doors color	Color casing	Term. PE+N	Pack. 1 pc.	Weight kg/1 pc.	Index new
1/8	RN 1x8	Transp.	Silver RAL 9006*	yes	1	0,55	**2402-07**

Protection degree IP 40, rated voltage 400V. Sealing possibility casings.
Terminal blocks included
N 1x(5x10mm² + 2x16mm²)
PE 1x(5x10mm² + 2x16mm²)
NORM: PN-EN 61439-3:2012, PN-EN 61439-1:2011
Obudowa lakierowana proszkowo.
Dimensions: 195x195x98 mm

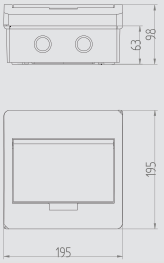

IP 40 IK 05 400 V PS

ELEGANT RN 1x12 (PE+N) IP 40

Rows / modu-les	Type	Doors color	Color casing	Term. PE+N	Pack. 1 pc.	Weight kg/1 pc.	Index new
1/12	RN 1x12	Transp.	Cream RAL 1015*	yes	1	0,92	**2403-03**

Protection degree IP 40, rated voltage 400V. Sealing possibility casings.
Terminal blocks included
N 1x(3x10 mm² + 6x16 mm²)
PE 1x(3x10 mm² + 6x16 mm²)
NORM: PN-EN 61439-3:2012, PN-EN 61439-1:2011
Dimensions: 303x212x98 mm

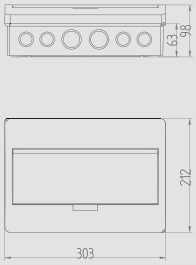

IP 40 IK 05 400 V PS

ELEGANT RN 1x12 (PE+N) IP 40

Rows / modu-les	Type	Doors color	Color casing	Term. PE+N	Pack. 1 pc.	Weight kg/1 pc.	Index new
1/12	RN 1x12	Transp.	Brown RAL 8028*	yes	1	0,92	**2403-05**

Protection degree IP 40, rated voltage 400V. Sealing possibility casings.
Terminal blocks included
N 1x(3x10 mm² + 6x16 mm²)
PE 1x(3x10 mm² + 6x16 mm²)
NORM: PN-EN 61439-3:2012, PN-EN 61439-1:2011
Dimensions: 303x212x98 mm

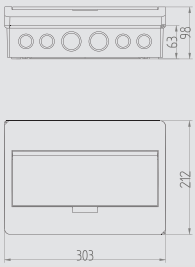

IP 40 IK 05 400 V PS

ELEGANT RN 1x12 (PE+N) IP 40

Rows / modu-les	Type	Doors color	Color casing	Term. PE+N	Pack. 1 pc.	Weight kg/1 pc.	Index new
1/12	RN 1x12	Transp.	Silver RAL 9006*	yes	1	0,92	**2403-07**

Protection degree IP 40, rated voltage 400V. Sealing possibility casings.
Terminal blocks included
N 1x(3x10 mm² + 6x16 mm²)
PE 1x(3x10 mm² + 6x16 mm²)
NORM: PN-EN 61439-3:2012, PN-EN 61439-1:2011
Obudowa lakierowana proszkowo.
Dimensions: 303x212x98 mm

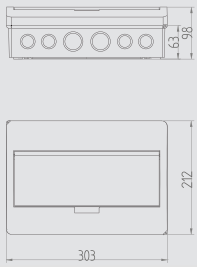

IP 40 IK 05 400 V PS

ELEGANT RP 1x5 IP 40

Rows / modules	Type	Doors color	Term. PE+N	Pack. 1 pc.	Weight kg/1 pc.	Index new
1/5	RP 1x5	Transp.	yes	3	0,24	**2411-01**

Protection degree IP 40, rated voltage 400V
Terminal blocks included
Terminal plate 1x10mm²
NORM: PN-EN 61439-3:2012, PN-EN 61439-1:2011
Dimensions: 116x156x93 mm

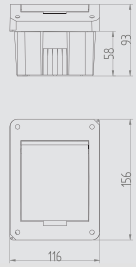

IP 40 IK 05 400 V PS

ELEGANT RP 1x8 IP 40 (PE+N)

Rows / modules	Type	Doors color	Term. PE+N	Pack. 1 pc.	Weight kg/1 pc.	Index new
1/8	RP 1x8	Transp.	yes	1	0,46	**2412-01**

Protection degree IP 40, rated voltage 400V
Terminal blocks included
N 1x(5x10mm² + 2x16mm²)
PE 1x(5x10mm² + 2x16mm²)
NORM: PN-EN 61439-3:2012, PN-EN 61439-1:2011
Dimensions: 195x195x90 mm

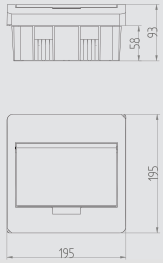

IP 40 IK 05 400 V PS

ELEGANT RP 1x12 IP 40 (PE+N)

Rows / modules	Type	Doors color	Term. PE+N	Pack. 1 pc.	Weight kg/1 pc.	Index new
1/12	RP 1x12	Transp.	yes	1	0,9	**2413-01**
1/12	RP 1x12	White	yes	1	0,9	**2413-00**

Protection degree IP 40, rated voltage 400V
Terminal blocks included
N 1x(7x10mm² + 2x16mm²)
PE 1x(7x10mm² + 2x16mm²)
NORM: PN-EN 61439-3:2012, PN-EN 61439-1:2011
Dimensions: 303x214x104 mm

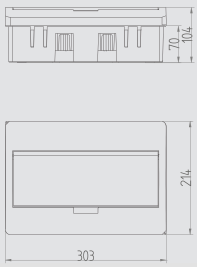

IP 40 IK 05 400 V PS

ELEGANT RP 1x18 IP 40 (PE+N)

Rows / modules	Type	Doors color	Term. PE+N	Pack. 1 pc.	Weight kg/1 pc.	Index new
1/18	RP 1x18	Transp.	yes	1	1,05	**2414-01**
1/18	RP 1x18	White	yes	1	1,05	**2414-00**

Protection degree IP 40, rated voltage 400V
Terminal blocks included
N 1x(12x10mm² + 2x16mm²)
PE 1x(12x10mm² + 2x16mm²)
NORM: PN-EN 61439-3:2012, PN-EN 61439-1:2011
Dimensions: 409x260x95 mm

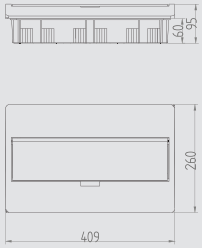

IP 40 IK 05 400 V PS

ELEGANT RP 2x12 IP 40 (PE+N)

Rows / modules	Type	Doors color	Term. PE+N	Pack. 1 pc.	Weight kg/1 pc.	Index new
2/12	RP 2x12	Transp.	yes	1	1,3	**2415-01**
2/12	RP 2x12	White	yes	1	1,3	**2415-00**

Protection degree IP 40, rated voltage 400V
Terminal blocks included
N 2x(7x10mm² + 2x16mm²)
PE 1x(7x10mm² + 2x16mm²)
NORM: PN-EN 61439-3:2012, PN-EN 61439-1:2011
Dimensions: 303x407x99 mm

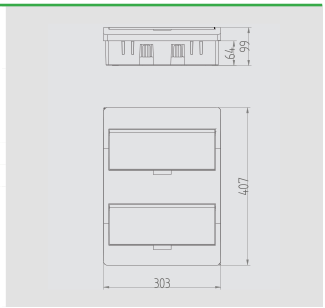

IP 40 IK 05 400 V PS

ELEGANT RP 2x18 IP 40 (PE+N)

Rows / modules	Type	Doors color	Term. PE+N	Pack. 1 pc.	Weight kg/1 pc.	Index new
2/18	RP 2x18	Transp.	yes	1	2,1	**2417-01**
2/18	RP 2x18	White	yes	1	2,1	**2417-00**

Protection degree IP 40, rated voltage 400V
Terminal blocks included
N 2x(12x10 mm² + 2x16 mm²)
PE 1x(12x10 mm² + 2x16 mm
NORM: PN-EN 61439-3:2012, PN-EN 61439-1:2011
Dimensions: 409x430x95 mm

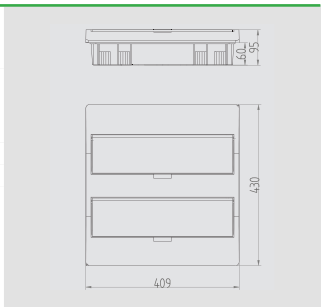

IP 40 IK 05 400 V PS 3X12

ELEGANT RP 3x12 IP 40 (PE+N)

Rows / modules	Type	Doors color	Term. PE+N	Pack. 1 pc.	Weight kg/1 pc.	Index new
3/12	RP 3x12	Transp.	yes	1	2,0	**2416-01**
3/12	RP 3x12	White	yes	1	2,0	**2416-00**

Protection degree IP 40, rated voltage 400V
Terminal blocks included
N 2x(7x10mm² + 2x16mm²)
PE 2x(7x10mm² + 2x16mm²)
NORM: PN-EN 61439-3:2012, PN-EN 61439-1:2011
Dimensions: 303x550x104 mm

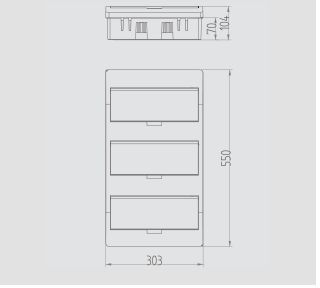

Enclosures hermetic

GALANT PLUS IP 65

VIFA enclosures

epn ELEKTRO-PLAST NASIELSK

Protection degree	IP 65
Impact resistance	IK 08
Tworzywo	>ABS<
Protection class	II
Color	RAL 7035(light gray)
Rated voltage	AC 440V/50Hz
Thermal condition	-25 °C +85 °C
Thermal test	80 °C
Norm	PN-EN 61439-3:2012, PN-EN 61439-1:2011

1x18-mod.
1604-01

2x18-mod.
1606-01

3x18-mod.
1608-01

4x18-mod.
1609-01

- degree protection IP 65
- protection class II
- 1 to 4 rows serie
- 12 and 18 mod. in rows
- enclosures 3 to 72 mod.
- advanced technology 2 components knockouts into serie 18 mod
- impact resistance IK08

cables enter by elastic round membranes into 2 components bushes

screw

terminal bars PE+N in standard

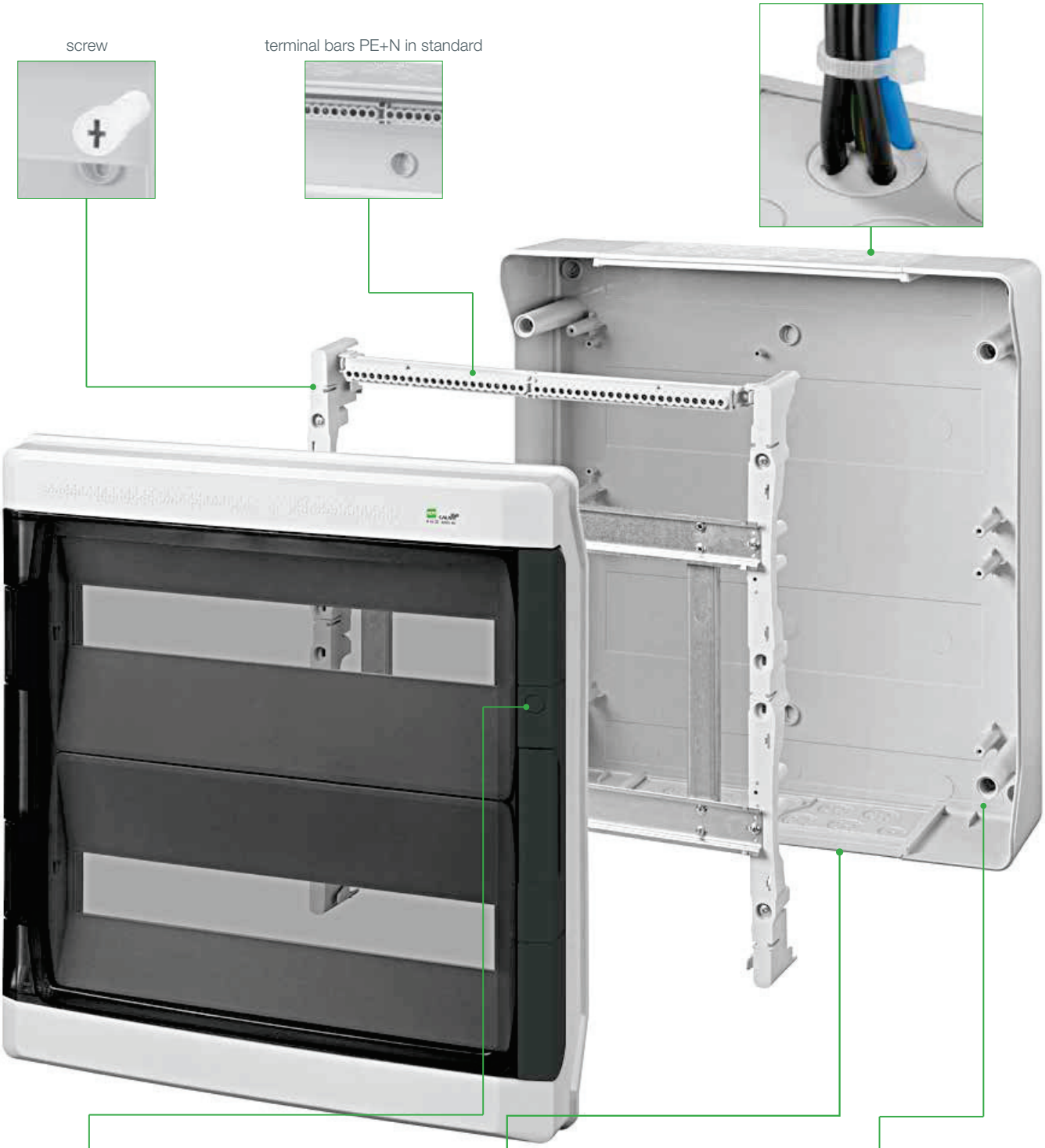

optional system door locking

sealing

screw cap

IP 65 UV IK 08 400 V ABS

GALANT PLUS RN 1x3 IP 65

Type	Color	Pack. 1 pc.	Weight kg/1 pc.	Index
RN 1x3	Transp.	1	0,4	**1600-01**

Protection degree IP 65, rated voltage 400V
Standard included terminal bars PE + N.
NORM: PN-EN 61439-3:2012, PN-EN 61439-1:2011. Sealing possibility.
Dimensions 100 x 175 x 105 mm

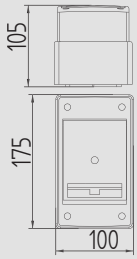

IP 65 UV IK 08 400 V ABS

GALANT PLUS RN 1x4 IP 65

Type	Color	Pack. 1 pc.	Weight kg/1 pc.	Index
RN 1x4	Transp.	1	0,64	**1601-01**

Protection degree IP 65, rated voltage 400V
Standard included terminal bars PE + N.
NORM: PN-EN 61439-3:2012, PN-EN 61439-1:2011. Sealing possibility.
Dimensions 147x217x117 mm

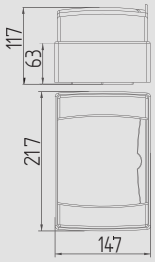

IP 65 UV IK 08 400 V ABS

GALANT PLUS RN 1x8 IP 65

Type	Color	Pack. 1 pc.	Weight kg/1 pc.	Index
RN 1x8	Transp.	1	0,85	**1602-01**

Protection degree IP 65, rated voltage 400V
Standard included terminal bars PE + N.
NORM: PN-EN 61439-3:2012, PN-EN 61439-1:2011. Sealing possibility.
Dimensions 235x217x117 mm

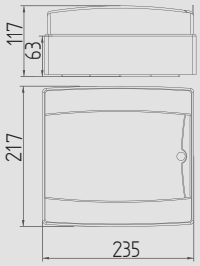

IP 65 UV IK 08 400 V ABS

GALANT PLUS RN 1x12 IP 65

Type	Color	Pack. 1 pc.	Weight kg/1 pc.	Index
RN 1x12	Transp.	1	10,6	**1603-01**

Protection degree IP 65, rated voltage 400V
Standard included terminal bars PE + N.
NORM: PN-EN 61439-3:2012, PN-EN 61439-1:2011. Sealing possibility.
Dimensions 307x217x117 mm

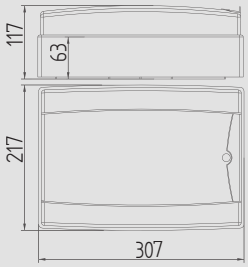

IP 65 UV IK 08 400 V ABS

GALANT PLUS RN 2x12 IP 65

Type	Color	Pack. 1 pc.	Weight kg/1 pc.	Index
RN 2x12	Transp.	1	2,14	**1605-01**

Protection degree IP 65, rated voltage 400V
Standard included terminal bars PE + N.
NORM: PN-EN 61439-3:2012, PN-EN 61439-1:201. Sealing possibility.
Dimensions 305x410x160 mm

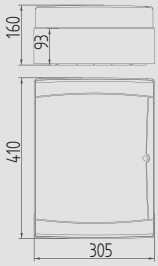

IP 65 UV IK 08 400 V ABS

GALANT PLUS RN-3x12 IP 65

Type	Color	Pack. 1 pc.	Weight kg/1 pc.	Index
RN 3x12	Transp.	1	2,75	**1607-01**

Protection degree IP 65, rated voltage 400V
Standard included terminal bars PE + N.
NORM: PN-EN 61439-3:2012, PN-EN 61439-1:2011. Sealing possibility.
Dimensions 323x563x160 mm

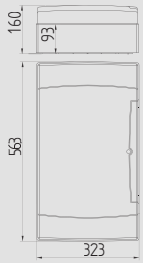

IP 65 UV IK 08 400 V ABS

GALANT PLUS RN 1x18 IP 65

Type	Color	Pack. 1 pc.	Weight kg/1 pc.	Index
RN 1x18	Transp.	1	2,54	**1604-01**

Protection degree IP 65, rated voltage 400V
Plate culvert 2-component supplied.
Standard included terminal bars PE + N.
NORM: PN-EN 61439-3:2012, PN-EN 61439-1:2011
Dimensions 432x290.5x160 mm

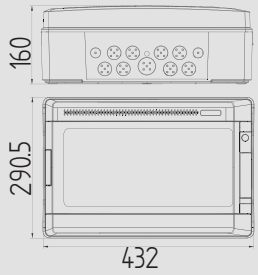

IP 65 UV IK 08 400 V ABS

GALANT PLUS RN 2x18 IP 65

Type	Color	Pack. 1 pc.	Weight kg/1 pc.	Index
RN 2/18	Transp.	1	3,96	**1606-01**

Protection degree IP 65, rated voltage 400V
Plate culvert 2-component supplied.
Standard included terminal bars PE + N.
NORM: PN-EN 61439-3:2012, PN-EN 61439-1:2011
Dimensions 432x464x160 mm

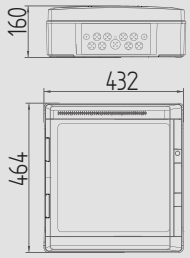

IP 65 UV IK 08 400 V ABS

GALANT PLUS RN 3x18 IP 65

Type	Color	Pack. 1 pc.	Weight kg/1 pc.	Index
RN 3x18	Transp.	1	5,72	**1608-01**

Protection degree IP 65, rated voltage 400V
Plate culvert 2-component supplied.
Standard included terminal bars PE + N.
NORM: PN-EN 61439-3:2012, PN-EN 61439-1:2011
Dimensions 432x638x160 mm

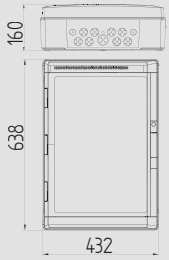

IP 65 UV IK 08 400 V ABS

GALANT PLUS RN 4x18 IP 65

Type	Color	Pack. 1 pc.	Weight kg/1 pc.	Index
RN 4x18	Transp.	1	7,69	**1609-01**

Protection degree IP 65, rated voltage 400V
Plate culvert 2-component supplied.
Standard included terminal bars PE + N.
NORM: PN-EN 61439-3:2012, PN-EN 61439-1:2011
Dimensions 432x878x160 mm

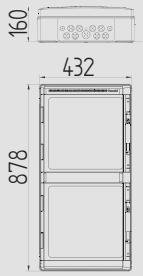

KEY LOCK GALANT PLUS

Type	Color	Pack. 1 pc.	Weight kg/1 pc.	Index
Key lock	-	1	0,03	**0260-03**

Key lock with 2 keys.

4x18-mod.
1609-01

Enclosure hermetic

EP-LUX Plus IP 55/65

VIFA enclosures

epn ELEKTRO-PLAST NASIELSK

Enclosure hermetic

EP-LUX Plus IP 55/65

Protection degree	IP 55 / IP 65
Material	ABS
Impact resistance	IK 08
Color	RAL 7035 (light grey)
Thermal condition	-20°C +70°C
Thermal test	70°C
Norm	PN-EN 61439-3:2012, PN-EN 61439-1:2011

1x6-mod.
1910-01

1x8-mod.
1911-01

1x12-mod.
1904-01

1x18-mod.
1905-01

2x12-mod.
1906-01

2x18-mod.
1912-01

3x12-mod.
1908-01

3/57 (1x18+2x18)
1913-01

3x18
3x18-mod.
1909-01

4x18 (2x2x18)
1914-01

- degree protection IP 55 / IP 65
- impact resistance IK08
- protection class II
- 1-4 rows
- 12 and 18 mod. in row serie
- 6, 8, 12, 18, 24, 36, 54, 72 – mod.
- standard included terminal bars PE + N
- key lock option

sealed door

terminal block PE+N equiped

large space for cables

sealing possibility

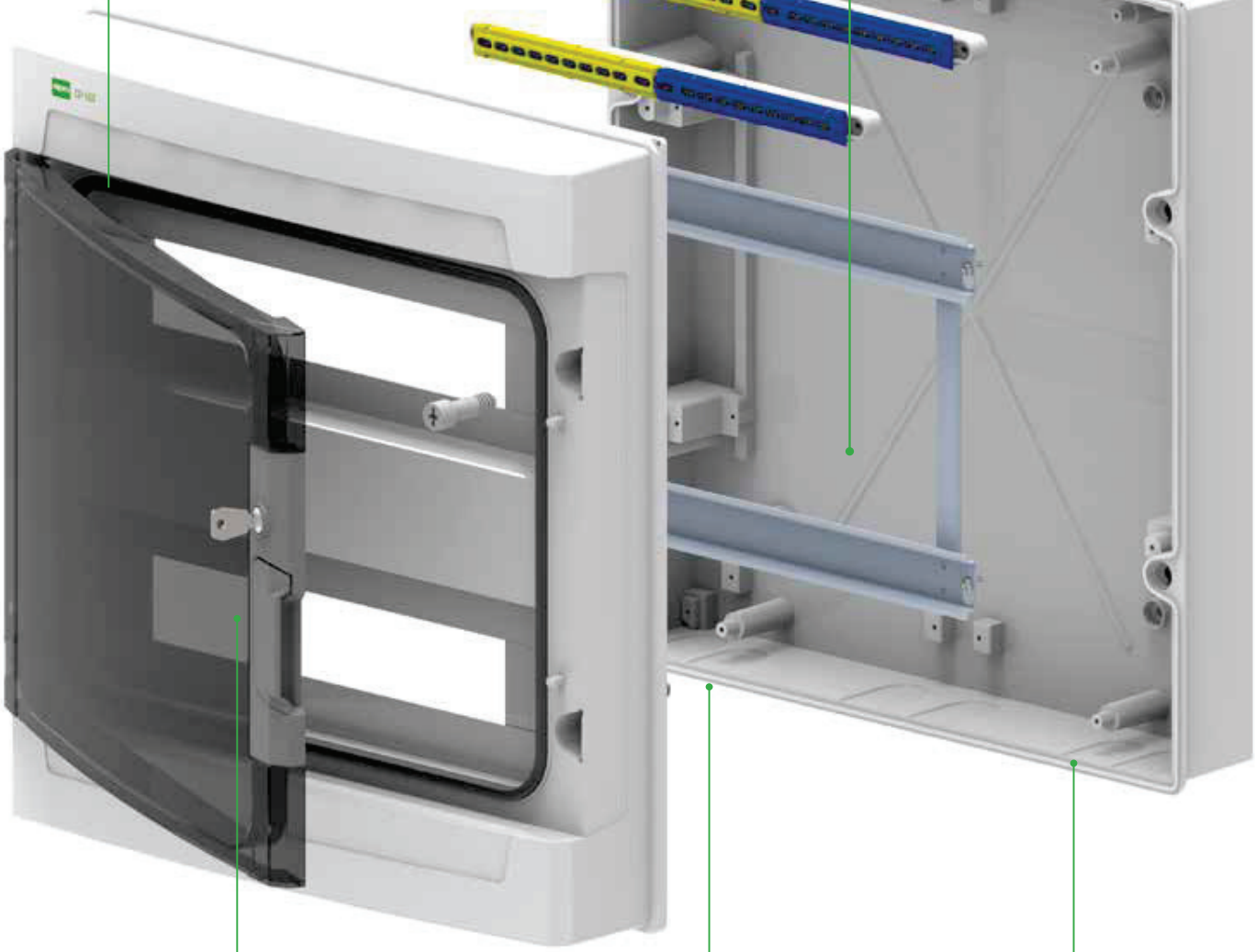

new system door locking

weaknesses for cable glands

rigid construction IK07

IP 55 IK 08 400 V ABS

EP-LUX PLUS RN 1x5 IP 55 PE+N

Rows / modules	Type	Doors color	Term. PE+N	Pack. 1 pc.	Weight kg/1 pc.	Index
1/5	RN 1/5	Transp.	yes	3	0,34	**1951-01**

Protection degree IP 55, rated voltage 400V
Terminal plate 1x10mm²
NORM: PN-EN 61439-3:2012, PN-EN 61439-1:2011
Dimensions: 118x158x93 mm

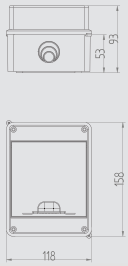

IP 55 IK 08 400 V ABS

EP-LUX PLUS RN 1x7 IP 55 (PE+N)

Rows / modules	Type	Doors color	Term. PE+N	Pack. 1 pc.	Weight kg/1 pc.	Index
1/7	RN 1/7	Transp.	yes	1	0,53	**1952-01**

Protection degree IP 55, rated voltage 400V
Terminal blocks included
N 2x(3x10mm² + 2x16mm²)
PE 2x(3x10mm² + 2x16mm²)
NORM: PN-EN 61439-3:2012, PN-EN 61439-1:2011
Dimensions: 157x173x96 mm

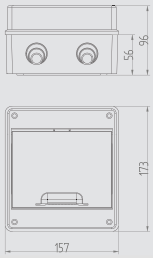

IP 55 IK 08 400 V ABS

EP-LUX PLUS RN 1x9 IP 55 (PE+N)

Rows / modules	Type	Doors color	Term. PE+N	Pack. 1 pc.	Weight kg/1 pc.	Index
1/9	RN 1/9	Transp.	yes	1	0,85	**1953-01**

Protection degree IP 55, rated voltage 400V
Terminal blocks included
N 1x(5x10mm²+2x16mm²)
PE 1x(5x10mm²+2x16mm²)
NORM: PN-EN 61439-3:2012, PN-EN 61439-1:2011
Dimensions: 197x197x55 mm

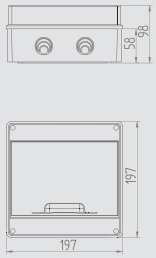

IP 65 IK 08 400 V ABS

EP-LUX PLUS RN 1x6 IP 65 (PE+N)

Rows / modules	Type	Doors color	Term. PE+N	Pack. 1 pc.	Weight kg/1 pc.	Index
1/6	RN 1/6	Transp.	yes	1	0,82	**1960-01**

Protection degree IP 65, rated voltage 400V
Terminal blocks included
N 2x(3x10mm² + 2x16mm²)
PE 2x(3x10mm² + 2x16mm²)
NORM: PN-EN 61439-3:2012, PN-EN 61439-1:2011
Dimensions:185x215x113 mm

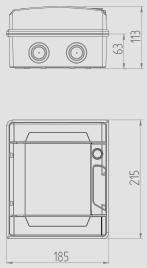

IP 65 IK 08 400 V ABS

EP-LUX PLUS RN 1x8 IP 65 (PE+N)

Rows / modules	Type	Doors color	Term. PE+N	Pack. 1 pc.	Weight kg/1 pc.	Index
1/9	RN 1/9	Transp.	yes	1	1,1	**1961-01**

Protection degree IP 65, rated voltage 400V
Terminal blocks included
N 1x(5x10mm²+2x16mm²)
PE 1x(5x10mm²+2x16mm²)
Expand 9-mod in row.
NORM: PN-EN 61439-3:2012, PN-EN 61439-1:2011
Dimensions: 239x214x113 mm

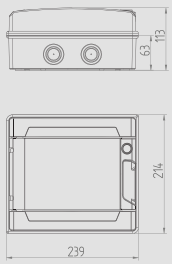

IP 65 IK 08 400 V ABS

EP-LUX PLUS RN 1x12 IP 65 (PE+N)

Rows / modules	Type	Doors color	Term. PE+N	Pack. 1 pc.	Weight kg/1 pc.	Index
1/12	RN 1/12	Transp.	yes	1	1,60	**1954-01**

Protection degree IP 65, rated voltage 400V
Terminal blocks included
N 1x(3x10mm² + 6x16mm²)
PE 1x(3x10mm² + 6x16mm²)
Expand 13-mod in row.
NORM: PN-EN 61439-3:2012, PN-EN 61439-1:2011
Dimensions: 303x214x118 mm

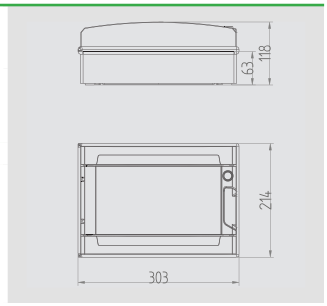

IP 65 IK 08 400 V ABS

EP-LUX PLUS RN 2x12 IP 65 (PE+N)

Rows / modules	Type	Doors color	Term. PE+N	Pack. 1 pc.	Weight kg/1 pc.	Index
2/12	RN 2/24	Transp.	yes	1	1,95	**1956-01**

Protection degree IP 65, rated voltage 400V
Terminal blocks included
N 2x(3x10mm² + 6x16mm²)
PE 1x(3x10mm² + 6x16mm²)
Expand 13-mod in row.
NORM: PN-EN 61439-3:2012, PN-EN 61439-1:2011
Dimensions: 304x408x149 mm

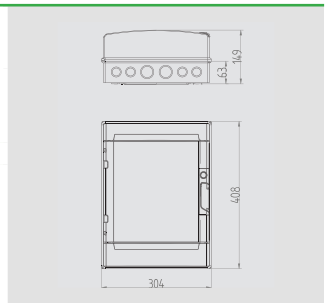

IP 65 IK 08 400 V ABS

EP-LUX PLUS RN 3x12 IP 65 (PE+N)

Rows / modules	Type	Doors color	Term. PE+N	Pack. 1 pc.	Weight kg/1 pc.	Index
3/12	RN 3/36	Transp.	yes	1	3,30	**1958-01**

Protection degree IP 65, rated voltage 400V
Terminal blocks included
N 2x(3x10mm² + 6x16mm²)
PE 2x(3x10mm² + 6x16mm²)
Expand 13-mod in row.
NORM: PN-EN 61439-3:2012, PN-EN 61439-1:2011
Dimensions: 303x642x118 mm

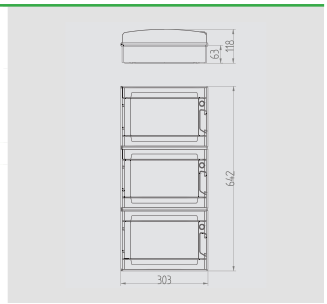

KEY LOCK EP-LUX PLUS

Type	Color	Pack. 1 pc.	Weight kg/1 pc.	Index
key lock	-	1	0,038	**190410-00**

Key lock with 2 keys.

IP 65 IK 08 400 V ABS

EP-LUX PLUS RN 1x18 IP 65 (PE+N)

Rows / modules	Type	Doors color	Term. PE+N	Pack. 1 pc.	Weight kg/1 pc.	Index
1/18	RN 1/18	Transp.	yes	1	1,85	**1955-01**

Protection degree IP 65, rated voltage 400V
Terminal blocks included
N 1x(6x10mm² + 8x16mm²)
PE 1x(6x10mm² + 8x16mm²)
Expand 19-mod in row.
NORM: PN-EN 61439-3:2012, PN-EN 61439-1:2011
Dimensions: 410x262x150 mm

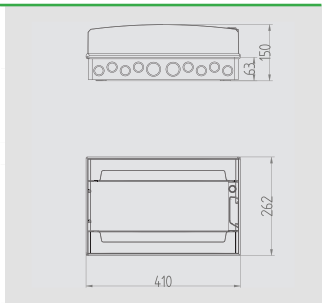

IP 65 IK 08 400 V ABS

EP-LUX PLUS RN 2x18 IP 65 (PE+N)

Rows / modules	Type	Doors color	Term. PE+N	Pack. 1 pc.	Weight kg/1 pc.	Index
2/18	RN 2/36	Transp.	yes	1	2,92	**1962-01**

Protection degree IP 65, rated voltage 400V
Terminal blocks included
N 2x(6x10mm² + 8x16mm²)
PE 1x(6x10mm² + 8x16mm²)
Expand 19-mod in row.
NORM: PN-EN 61439-3:2012, PN-EN 61439-1:2011
Dimensions: 410x430x151 mm

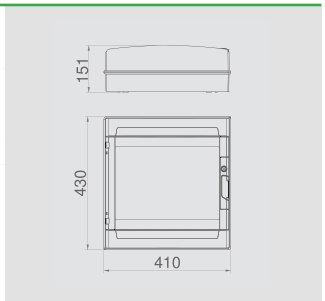

IP 65 IK 08 400 V ABS

EP-LUX PLUS RN 3x18 (1x18+2x18) IP 65

Rows / modules	Type	Doors color	Term. PE+N	Pack. 1 pc.	Weight kg/1 pc.	Index
3/18	RN 3/54	Transp.	yes	1		**1963-01**

Protection degree IP 65, rated voltage 400V
Terminal blocks included
N 2x(6x10mm² + 8x16mm²)
PE 2x(6x10mm² + 8x16mm²)
2x terminal block 7-way 2x (LZ-7/N)
Expand 19-mod in row.
NORM: PN-EN 61439-3:2012, PN-EN 61439-1:2011
Dimensions: 303x642x118 mm

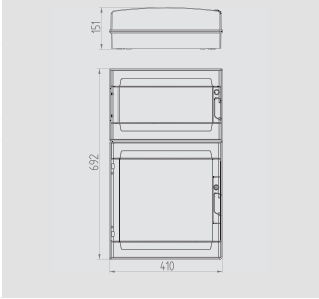

IP 65 IK 08 400 V ABS

EP-LUX PLUS RN 3x18 IP 65 (PE+N)

Rows / modules	Type	Doors color	Term. PE+N	Pack. 1 pc.	Weight kg/1 pc.	Index
3/18	RN 3/54	Transp.	yes	1	4,70	**1959-01**

Protection degree IP 65, rated voltage 400V
Terminal blocks included
N 2x(6x10mm² + 8x16mm²)
PE 2x(6x10mm² + 8x16mm²)
Expand 19-mod in row.
NORM: PN-EN 61439-3:2012, PN-EN 61439-1:2011
Dimensions: 410x786x150 mm

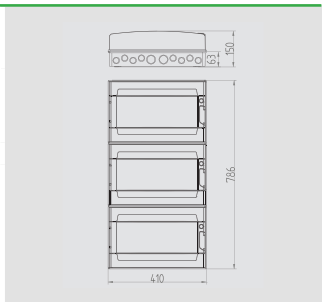

IP 65 IK 08 400 V ABS

EP-LUX PLUS RN 4x18 (2x2x36) IP 65

Rows / modules	Type	Doors color	Term. PE+N	Pack. 1 pc.	Weight kg/1 pc.	Index
4/18	RN 4/72	Transp.	yes	1		**1964-01**

Protection degree IP 65, rated voltage 400V
Terminal blocks included
N 2x(6x10mm² + 8x16mm²)
PE 2x(6x10mm² + 8x16mm²))
3x terminal block 7-way 3x (LZ-7/N)
Expand 19-mod in row.
NORM: PN-EN 61439-3:2012, PN-EN 61439-1:2011
Dimensions: 303x642x118 mm

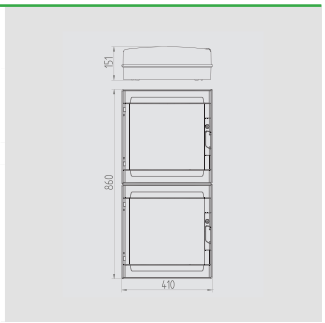

CASINGS
MIKRO/MINI

VIFA enclosures

epn NASIELSK ELEKTRO-PLAST

Protection degree	IP 20 / IP 30
Material	PS
Impact resistance	IK 05
Thermal condition	-20°C +70°C
Thermal test	70°C
Norm	PN-EN 61439-3 PN-EN 61439-1

1/2-mod.
2342-00

1/4-mod.
2344-00

1/2-mod.
2302-01

1/3-mod.
2303-01

1/4-mod.
2304-01

1/5-mod.
2305-01

1/6-mod.
2306-01

PRODUKT POLSKI

CE

- protection degree IP 20 / IP 30
- protection class II
- S2, S4 MIKRO
- S2, S3, S4, S5, S6 MINI
- impact resistance IK05
- sealing possibility: casings and doors

hardened steel screws for fast and solid assembly

sealing possibility: casings and doors

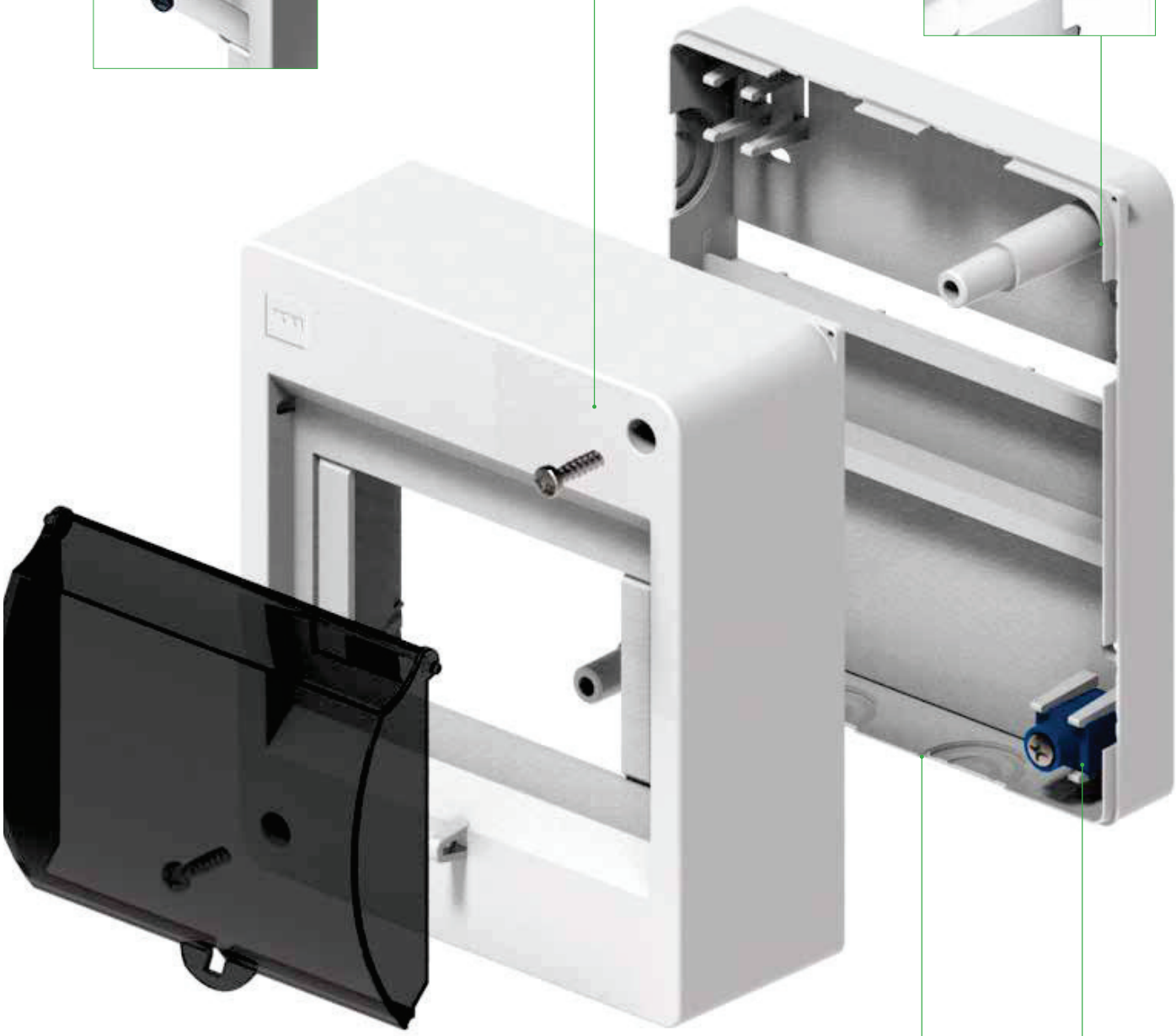

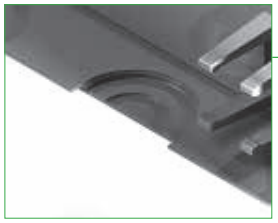

weaknesses for cables at casing wall sides

protected terminal to avoid accidents

IP 30 IK 05 400 V PS

MIKRO CASINGS SURFACE MOUNTED S-2

Rows / modules	Type	Term. N	Pack. 1 pc.	Weight kg/1 pc.	Index new
1/2	S2	-	20	0,08	**2342-00**

Casing folded into CLICK type self-locking.
Sealing possibility casings. Snap mounting.
NORM: PN-EN 61439-3:2012, PN-EN 61439-1:2011 Dimensions: 44x125x58 mm

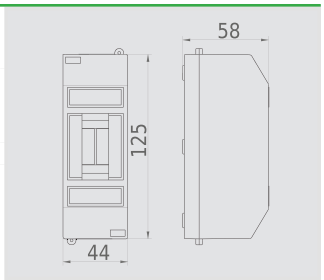

IP 30 IK 05 400 V PS

MIKRO CASINGS SURFACE MOUNTED S-4

Rows / modules	Type	Term. N	Pack. 1 pc.	Weight kg/1 pc.	Index new
1/2	S4	-	12	0,12	**2344-00**

Casing folded into CLICK type self-locking.
Sealing possibility casings. Snap mounting.
NORM: PN-EN 61439-3:2012, PN-EN 61439-1:2011 Dimensions:80x125x58 mm

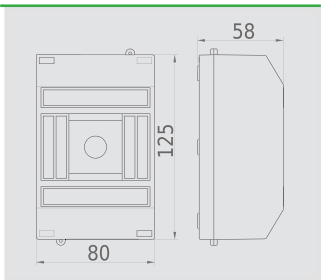

IP 20 IK 05 400 V PS

MINI CASINGS SURFACE MOUNTED TYPE S-2

Rows / modules	Type	Term. N	Pack. 1 pc.	Weight kg/1 pc.	Index new
1/2	S2	-	20	0,08	**2302-00**

Sealing possibility casings.
NORM: PN-EN 61439-3:2012, PN-EN 61439-1:2011 Dimensions: 53x141x66 mm

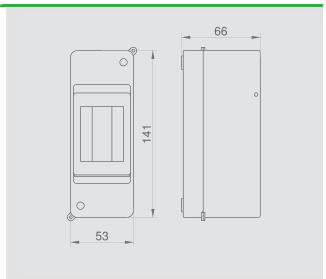

IP 20 IK 05 400 V PS

MINI CASINGS SURFACE MOUNTED TYPE S-3

Rows / modules	Type	Term. N	Pack. 1 pc.	Weight kg/1 pc.	Index new
1/3	S3	-	12	0,13	**2303-00**
1/3	S3	yes	12	0,13	**2303-10**

Sealing possibility casings.
Equipped with a N terminal 1x2,5mm²
NORM: PN-EN 61439-3:2012, PN-EN 61439-1:2011 Dimensions: 82x140x66 mm

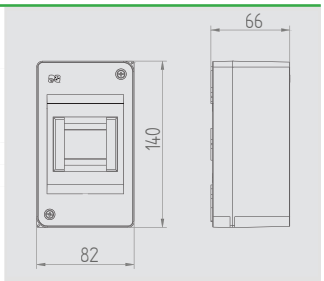

IP 20 IK 05 400 V PS

MINI CASINGS SURFACE MOUNTED TYPE S-4

Rows / modules	Type	Term. PE+N	Pack. 1 pc.	Weight kg/1 pc.	Index new
1/4	S4	-	12	0,13	**2304-00**
1/4	S4	yes	12	0,14	**2304-10**

Terminal blocks included
N 1x(4x10mm² + 1x16mm²)
PE 1x(4x10mm² + 1x16mm²)
Sealing possibility casings.
NORM: PN-EN 61439-3:2012, PN-EN 61439-1:2011 Dimensions: 95x140x66 mm

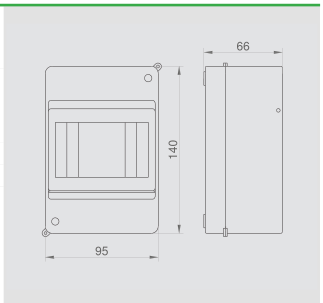

IP 20 IK 05 400 V PS

MINI CASINGS SURFACE MOUNTED TYPE S-5

Rows / modules	Type	Term. N	Pack. 1 pc.	Weight kg/1 pc.	Index new
1/5	S5	-	9	0,137	**2305-00**
1/5	S5	yes	9	0,140	**2305-10**

Terminal blocks included
Equipped with a N terminal 1x2,5mm²
Sealing possibility casings.
NORM: PN-EN 61439-3:2012, PN-EN 61439-1:2011 Dimensions: 120x140x66 mm

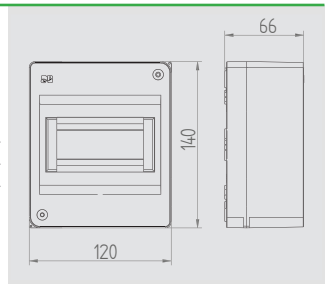

IP 20 IK 05 400 V PS

MINI CASINGS SURFACE MOUNTED S-6

Rows / modu-les	Type	Term. PE+N	Pack. 1 pc.	Weight kg/1 pc.	Index new
1/6	S6	yes	9	0,23	**2306-00**
1/6	S6	-	9	0,24	**2306-10**

Terminal blocks included
N 1x(6x10mm² + 1x16mm²)
PE 1x(6x10mm² + 1x16mm²
Sealing possibility casings.
NORM: PN-EN 61439-3:2012, PN-EN 61439-1:2011 Dimensions: 130x140x66 mm

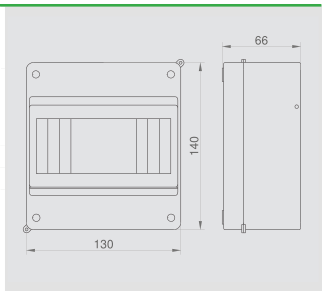

IP 30 IK 05 400 V PS

MINI CASINGS SURFACE MOUNTED S-2 WITH WINDOW

Rows / modu-les	Type	Glass color	Term. N	Pack. 1 pc.	Weight kg/1 pc.	Index new
1/2	S2	Transp.	-	20	0,09	**2302-01**

Sealing possibility: casings and doors.
NORM: PN-EN 61439-3:2012, PN-EN 61439-1:2011 Dimensions: 53x141x83 mm

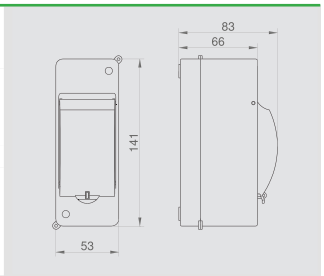

IP 30 IK 05 400 V PS

MINI CASINGS SURFACE MOUNTED S-3 WITH WINDOW

Rows / modu-les	Type	Glass color	Term. N	Pack. 1 pc.	Weight kg/1 pc.	Index new
1/3	S3	Transp.	-	12	0,13	**2303-01**
1/3	S3	Transp.	yes	12	0,14	**2303-11**

Sealing possibility: casings and doors.
Equipped with a N terminal 1x2,5mm²
NORM: PN-EN 61439-3:2012, PN-EN 61439-1:2011 Dimensions: 82x140x84mm

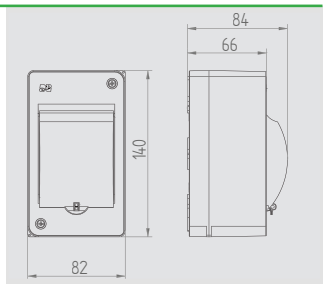

IP 30 IK 05 400 V PS

MINI CASINGS SURFACE MOUNTED S-4 WITH WINDOW

Rows / modu-les	Type	Glass color	Term. PE+N	Pack. 1 pc.	Weight kg/1 pc.	Index new
1/4	S4	Transp.	-	12	0,15	**2304-01**
1/4	S4	Transp.	yes	12	0,16	**2304-11**

Terminal blocks included
N 1x(4x10mm² + 1x16mm²)
PE 1x(4x10mm² + 1x16mm²)
Sealing possibility: casings and doors.
NORM: PN-EN 61439-3:2012, PN-EN 61439-1:2011 Dimensions: 195x140x83 mm

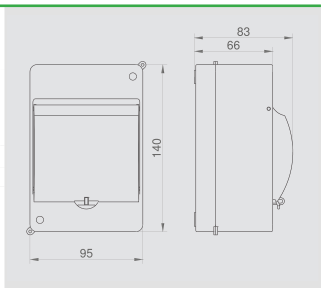

IP 30 IK 05 400 V PS

MINI CASINGS SURFACE MOUNTED S-5 WITH WINDOW

Rows / modu-les	Type	Glass color	Term. N	Pack. 1 pc.	Weight kg/1 pc.	Index new
1/5	S5	Transp.	-	9	0,16	**2305-01**
1/5	S5	Transp.	yes	9	0,17	**2305-11**

Sealing possibility: casings and doors.
Equipped with a N terminal 1x2,5mm²
NORM: PN-EN 61439-3:2012, PN-EN 61439-1:2011 Dimensions: 120x140x84 mm

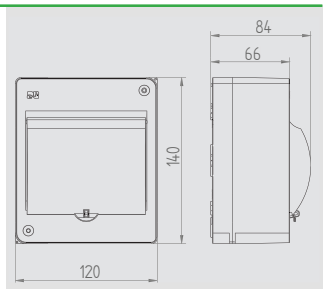

IP 30 IK 05 400 V PS

MINI CASINGS SURFACE MOUNTED S-6 WITH WINDOW

Rows / modu-les	Type	Glass color	Zaciski PE-N	Pack. 1 pc.	Weight kg/1 pc.	Index new
1/6	S6	Transp.	yes	9	0,28	**2306-01**
1/6	S6	Transp.	-	9	0,30	**2306-11**

Terminal blocks included
N 1x(6x10mm² + 1x16mm²)
PE 1x(6x10mm² + 1x16mm²)
Sealing possibility: casings and doors.
NORM: PN-EN 61439-3:2012, PN-EN 61439-1:2011 Dimensions: 130x140x83 mm

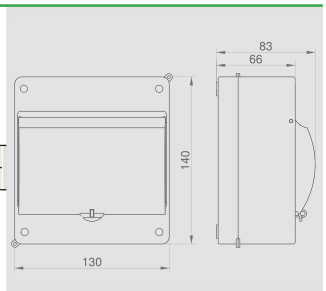

Developer type enclosures
MERIVA™ IP 40

VIFA enclosures

epn NASIELSK ELEKTRO-PLAST

Protection degree	IP 40
Material Door/Obudowa	ABS
Impact resistance	IK 08
Thermal condition	-20°C +70°C
Thermal test	70°C
Norm	PN-EN 61439-3:2012, PN-EN 61439-1:2011

2x12
3605-00

3x12
3606-00

2x12
3605-20 MULTIMEDIA

3x12
3606-20 MULTIMEDIA

2x12
3615-00

3x12
3616-00

2x12
3615-20 MULTIMEDIA

3x12
3616-20 MULTIMEDIA

PRODUKT POLSKI

MERIVA™
Enclosures multi-media and electrical version plastic made

- residential enclosures electrical and multi-media version plastic made
- made high quality ABS
- degree protection IP 40
- protection class II
- color RAL 9003 (White)
- terminal bars PE + N into support
- surface and flush mounted version
- 2 and 3 row version (2x24,3x36 mod)
- 12 mod serie
- universal left/right door
- door colour the same as enclosure

door colour the same as casing colour White RAL 9003

screw

unified upper cover inside

terminal bars PE+N into support as optional solution

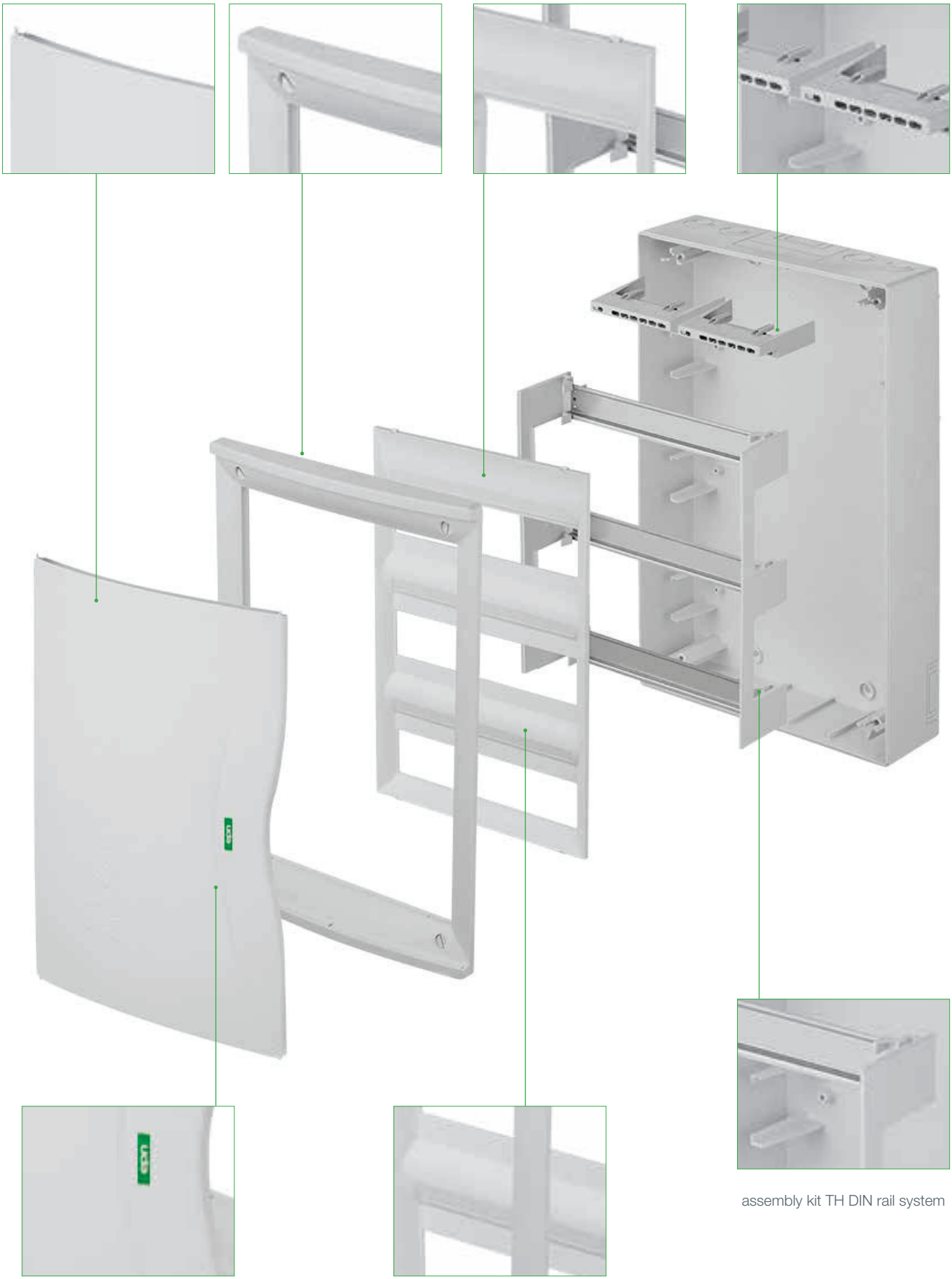

assembly kit TH DIN rail system

universal left /right doors

place for MCB's descriptions

MERIVA IP40 SURFACE MOUNTED

IP 40 IK 08 400 V

MERIVA RN 2x24 IP 40

Rows / modules	Type	Doors color	Term. PE+N	Pack. 1 pc.	Weight kg/1 pc.	Index
2/24	RN 2/24	White		1	2,00	**3605-00**

Protection degree IP 40, rated voltage 400V, II protection class
Additional option:
Terminal bars PE + N into support
N/PE 1x(6x10 mm² + 8x16 mm²)
NORM: PN-EN 61439-3
Dimensions: 350 x 310 x 110 mm

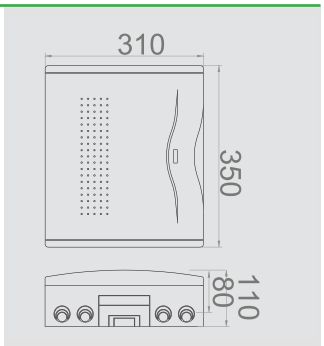

IP 40 IK 08 400 V

MERIVA RN 3x36 IP 40

Rows / modules	Type	Doors color	Term. PE+N	Pack. 1 pc.	Weight kg/1 pc.	Index
3/36	RN 3/36	White		1	2,80	**3606-00**

Protection degree IP 40, rated voltage 400V, II protection class
Additional option:
Terminal bars PE + N into support
N/PE 1x(6x10 mm² + 8x16 mm²)
NORM: PN-EN 61439-3
Dimensions: 460 x 310 x 110 mm

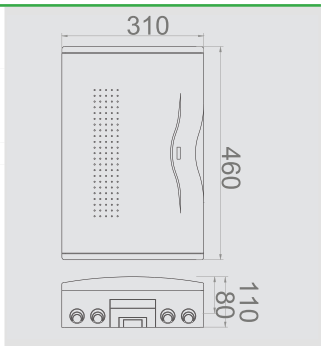

IP 40 IK 08 400 V

MERIVA RN 2x24 MULTIMEDIA

Rows / modules	Type	Doors color	Term. PE+N	Pack. 1 pc.	Weight kg/1 pc.	Index
2/24	RN 2/24	White		1	2,00	**3605-20**

Protection degree IP 40, rated voltage 400V.
NORM: PN-EN 61439-3
Dimensions: 350 x 310 x 110 mm

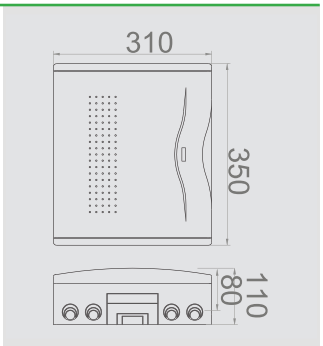

IP 40 IK 08 400 V

MERIVA RN 3x36 MULTIMEDIA

Rows / modules	Type	Doors color	Term. PE+N	Pack. 1 pc.	Weight kg/1 pc.	Index
3/36	RN 3/36	White		1	3,00	**3606-20**

Protection degree IP 40, rated voltage 400V.
NORM: PN-EN 61439-3
Dimensions: 460 x 310 x 110 mm

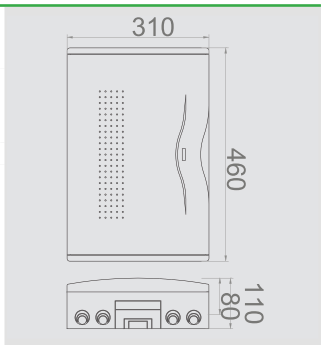

MERIVA IP40 SURFACE MOUNTED

IP 40 IK 08 400 V

MERIVA RP 2x24 IP 40

Rows / modules	Type	Doors color	Term. PE+N	Pack. 1 pc.	Weight kg/1 pc.	Index
2/24	RP 2/24	White		1	2,00	**3615-00**

Protection degree IP 40, rated voltage 400V, II protection class
Additional option:
Terminal bars PE + N into support
N/PE 1x(6x10 mm^2 + 8x16 mm^2)
NORM: PN-EN 61439-3
Dimensions: 350 x 310 x 110 mm

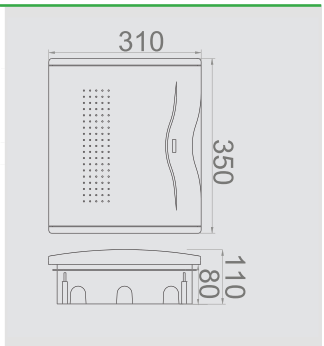

IP 40 IK 08 400 V

MERIVA RP 3x36 IP 40

Rows / modules	Type	Doors color	Term. PE+N	Pack. 1 pc.	Weight kg/1 pc.	Index
3/36	RP 3/36	White		1	2,80	**3616-00**

Protection degree IP 40, rated voltage 400V, II protection class
Additional option:
Terminal bars PE + N into support
N/PE 1x(6x10 mm^2 + 8x16 mm^2)
NORM: PN-EN 61439-3
Dimensions: 460 x 310 x 110 mm

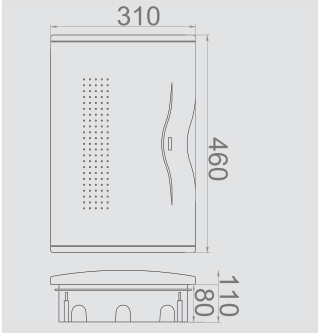

IP 40 IK 08 400 V

MERIVA RP 2x24 MULTIMEDIA

Rows / modules	Type	Doors color	Term. PE+N	Pack. 1 pc.	Weight kg/1 pc.	Index
2/24	RP 2/24	White		1	2,00	**3615-20**

Protection degree IP 40, rated voltage 400V.
NORM: PN-EN 61439-3
Dimensions: 350 x 310 x 110 mm

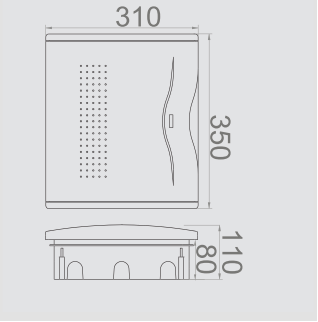

IP 40 IK 08 400 V

MERIVA RP 3x36 MULTIMEDIA

Rows / modules	Type	Doors color	Term. PE+N	Pack. 1 pc.	Weight kg/1 pc.	Index
3/36	RP 3/36	White		1	3,00	**3616-20**

Protection degree IP 40, rated voltage 400V.
NORM: PN-EN 61439-3
Dimensions: 460 x 310 x 110 mm

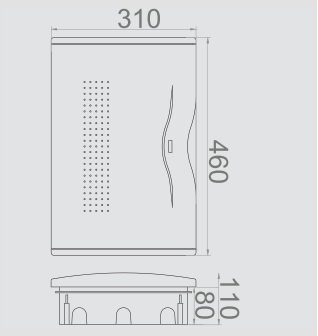

MERIVA ENCLOSURE ACCESSORIES

IP 40 IK 08 400 V

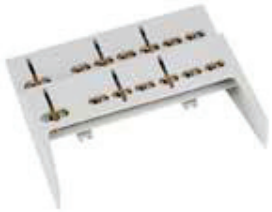

MERIVA BRACKET WITH A TERMINAL BLOCK

Rows / modules	Type	Doors color	Term. PE+N	Pack. 1 pc.	Weight kg/1 pc.	Index
-		-		1		**3600-10**

Rated voltage 400V, II protection class
NORM: PN-EN 61439-3
1x(6x10 mm² + 8x16 mm²)

IP 40 IK 08 400 V

TERMINAL BLOCK L-14 BRASS

Rows / modules	Type	Doors color	Term. PE+N	Pack. 1 pc.	Weight kg/1 pc.	Index
-		-		1		**3600-11**

Rated voltage 400V.
NORM: PN-EN 61439-3
1x(6x10 mm² + 8x16 mm²)

IP 40 IK 08 400 V

MERIVA BRACKET WITHOUT A TERMINAL BLOCK

Rows / modules	Type	Doors color	Term. PE+N	Pack. 1 pc.	Weight kg/1 pc.	Index
-		-		1		**3600-12**

Rated voltage 400V, II protection class
NORM: PN-EN 61439-3

MERIVA SOCKET 45X45 16A/250V

Rows / modules	Type	Doors color	Term. PE+N	Pack. 1 pc.	Weight kg/1 pc.	Index
-		-		1		**2000-42**

Socket 45x45 2P+Z 16A/250V white.
Socket for patch-panel MERIVA.

MERIVA PATCH – PANEL MULTIMEDIA 12-PORT STEEL

Rows / modules	Type	Doors color	Term. PE+N	Pack. 1 pc.	Weight kg/1 pc.	Index
-	12-port	-		1		**3600-46**

Steel panel
Dimensions: 276x164x1,5 mm

MERIVA MOUNTING PLATE PERFORATED

Rows / modules	Type	Doors color	Term. PE+N	Pack. 1 pc.	Weight kg/1 pc.	Index
-		-		1		**3600-27**

Steel panel
Dimensions: 234x225x1,5 mm

ENCLOSURES MSF™ WITH METAL DOOR FLUSH MOUNTED IP30

MSF patch-panel 18 ports for mod. teletechnical + cover.

ATRIBUTES OF MSF ENCLOSURES MULTI MEDIA VERSION FOR RESIDENTIAL

- 4 sizes available (1/12 :2/24 :3/36 : 4/48
- II class protection IP30
- flush mounted version with super flat metal doors (only 5 mm)
- assembly into hollow walls and brick walls
- possibility of joining enclosures next to electrical version one
- new rigid culvert plates for different cables diameters
- complete solution to tele-technical installation

CHARACTERISTIC OF MSF MULTI-MEDIA ENCLOSURE AS RESIDENTIAL DISTRIBUTION CENTRE:

- connection to local network and others media devices
- telephone separator for few telephones
- connection to broadband transmission (modem from internet supplier)
- suitable installation to easy crossing and services management
- structural cabling- provides higher speeds data transfer and is more stable that wireless technology

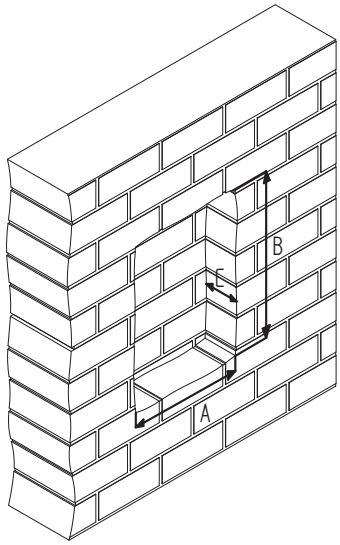

DIMENSIONS OF THE CENTER WIDTH IN THE WALL UNDER THE ENCLOSURE INSTALLATION

[mm]	1/12	2/24	3/36	4/48
A	358	358	358	358
B	329	478	603	728
C	91	91	91	91

Enclosures MSF™

with metal door flush mounted IP30

Enclosures MSF with metal door flush mounted IP30

Protection degree	IP 30
Material(door+ frame/base)	Powder coated steel / >ABS FR< ;>ABS<
Impact resistance	IK 05
Thermal condition	-20°C +70°C
Thermal test	70°C
Norm	IEC/EN 62208 IEC/EN 60670-24

1x12 2001-00

With the option of extension up to 14 modules in a row.

2x12 2002-00

With the option of extension up to 14 modules in a row.

3x12 2003-00

With the option of extension up to 14 modules in a row.

4x12 2004-00

With the option of extension up to 14 modules in a row.

1x12 2011-00

With the option of extension up to 14 modules in a row.

2x12 2012-00

With the option of extension up to 14 modules in a row.

3x12 2013-00

With the option of extension up to 14 modules in a row.

4x12 2014-00

With the option of extension up to 14 modules in a row.

- Degree protection IP 30
- super flat door only 5 mm
- since 12 to 48 mod
- rane 1 to 4 rows
- serie 12+ 2 mod
- impact resistance IK05
- MULTIMEDIA version
- weaknesses ensure precision holes cutting for cables
- coloured sections PE + N
- TS rails connected by vertical bars
- key lock option
- sealing cover possibility
- level for precision assembly
- combined horizontal/vertical
- clamp N optional

Super flat door and frame protruding above the wall 5mm, made of steel galvanized, powder coated.

latch protected cover

Orderly installation,sorting handles for connection to cable ties

fast assembly into hollow walls

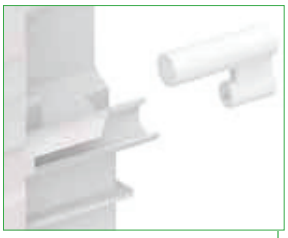

Universal mounting plate micro-perforated
Index: 2000-27

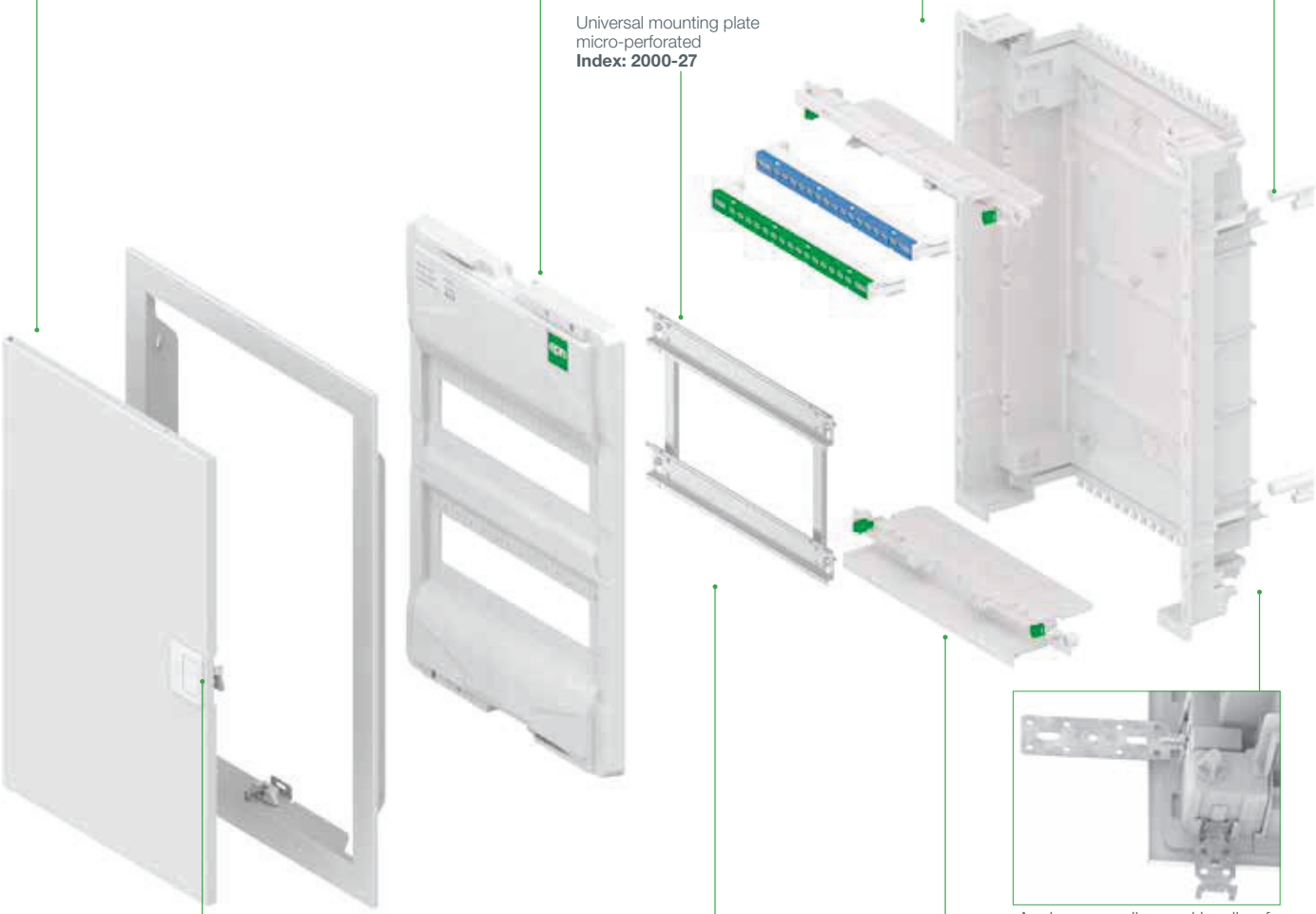

Anchors coupling and leveling for mounting in the wall. Level included.

Key lock option

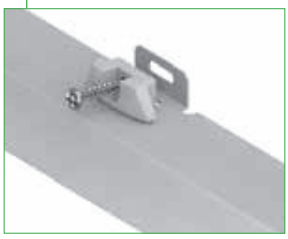

New rigid metal frame

Possibility of flexible utilities and cabling

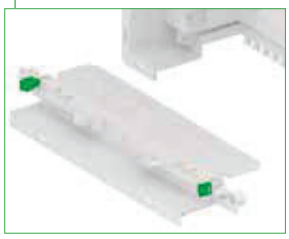

New bushing plates allowing use flat wires

Patented UP Poland

IP 30
STEEL

MSF RP 1x12 MULTIMEDIA

Type	Color	Pack. 1 pc.	Weight kg/1 pc.	Index
MSF RP 1/14 MM	White RAL 9016	1	1,9	**2011-00**

NORM: IEC/EN 62208, IEC/EN 60670-24
Includes kit for universal installation in a wall, among others, foot metal wall, clip to connect switchgear vertically and horizontally. Socket n/t 2P+Z
Mounting plate with holes for mounting devices tele-information.
Super-flat steel door. Only 5 mm thickness
Outside dimensions: 358 x 329 x 94 mm

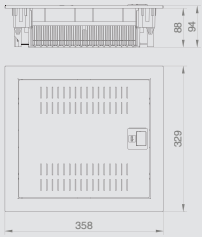

IP 30
STEEL

MSF RP 2x12 MULTIMEDIA

Type	Color	Pack. 1 pc.	Weight kg/1 pc.	Index
MSF RP 2/28 MM	White RAL 9016	1	2,8	**2012-00**

NORM: IEC/EN 62208, IEC/EN 60670-24
Includes kit for universal installation in a wall, among others, foot metal wall, clip to connect switchgear vertically and horizontally. Socket n/t 2P+Z. Rail TS35 – 1 pc.
Mounting plate with holes for mounting devices tele-information. – 1 pc.
Super-flat steel door. Only 5 mm thickness
Outside dimensions: 358 x 478 x 94 mm

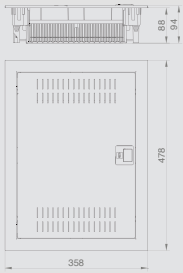

IP 30
STEEL

MSF RP 3x12 MULTIMEDIA

Type	Color	Pack. 1 pc.	Weight kg/1 pc.	Index
MSF RP 3/42 MM	White RAL 9016	1	3,6	**2013-00**

NORM: IEC/EN 62208, IEC/EN 60670-24
Includes kit for universal installation in a wall, among others, foot metal wall, clip to connect switchgear vertically and horizontally. Socket n/t 2P+Z. Rail TS35 – 1 pc.
Mounting plate with holes for mounting devices tele-information. – 2 szt
Super-flat steel door. Only 5 mm thickness
Outside dimensions: 358 x 603 x 94 mm

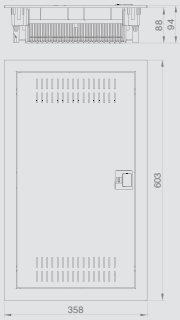

IP 30
STEEL

MSF RP 4x12 MULTIMEDIA

Type	Color	Pack. 1 pc.	Weight kg/1 pc.	Index
MSF RP 4/56 MM	White RAL 9016	1	4,26	**2014-00**

NORM: IEC/EN 62208, IEC/EN 60670-24
Includes kit for universal installation in a wall, among others, foot metal wall, clip to connect switchgear vertically and horizontally. Socket n/t 2P+Z. Rail TS35 – 1 szt
Mounting plate with holes for mounting devices tele-information. – 3 szt
Super-flat steel door. Only 5 mm thickness
Outside dimensions: 358 x 728 x 94 mm

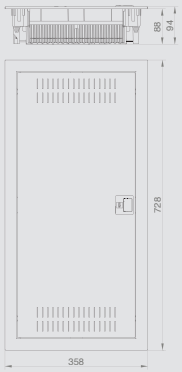

IP 30 | 400 V | STEEL

MSF RP 1x12 IP 30 (PE+N)

Type	Color	Pack. 1 pc.	Weight kg/1 pc.	Index
MSF RP 1/14	White RAL 9016	1	2,1	**2001-00**

Bracket with terminal equipped:
N 1x(1x25mm^2 + 14 x 16(10mm^2)
PE 1x(1x25mm^2 + 14 x 16(10mm^2) in 1 bracket
NORM: IEC/EN 62208, IEC/EN 60670-24
Includes kit for universal installation in a wall, among others, foot metal wall, clip to connect switchgear vertically and horizontally..
Protection degree IP 30, rated voltage 400 V AC
Super-flat steel door. Only 5 mm thickness
Outside dimensions: 358 x 329 x 94 mm

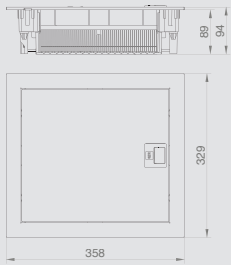

IP 30 | 400 V | STEEL

MSF RP 2x12 IP 30 (PE+N)

Type	Color	Pack. 1 pc.	Weight kg/1 pc.	Index
MSF RP 2/28	White RAL 9016	1	2,8	**2002-00**

Bracket with terminal equipped:
N 1x(1x25mm^2 + 17 x 16(10mm^2)
PE 1x(1x25mm^2 + 17 x 16(10mm^2) in 2 brackets
NORM: IEC/EN 62208, IEC/EN 60670-24
Includes kit for universal installation in a wall, among others, foot metal wall, clip to connect switchgear vertically and horizontally..
Protection degree IP 30, rated voltage 400 V AC
Super-flat steel door. Only 5 mm thickness
Outside dimensions: 358 x 478 x 94 mm

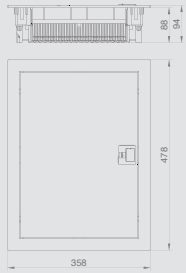

IP 30 | 400 V | STEEL

MSF RP 3x12 IP 30 (PE+N)

Type	Color	Pack. 1 pc.	Weight kg/1 pc.	Index
MSF RP 3/42	White RAL 9016	1	3,6	**2003-00**

Bracket with terminal equipped:
N 1x(1x25mm^2 + 22 x 16(10mm^2)
PE 1x(1x25mm^2 + 22 x 16(10mm^2) in 2 brackets
NORM: IEC/EN 62208, IEC/EN 60670-24
Includes kit for universal installation in a wall, among others, foot metal wall, clip to connect switchgear vertically and horizontally..
Protection degree IP 30, rated voltage 400 V AC
Super-flat steel door. Only 5 mm thickness
Outside dimensions: 358 x 603 x 94 mm

IP 30 | 400 V | STEEL

MSF RP 4x12 IP 30 (PE+N)

Type	Color	Pack. 1 pc.	Weight kg/1 pc.	Index
MSF RP 4/56	White RAL 9016	1	4,26	**2004-00**

Bracket with terminal equipped:
N 1x(1x25mm^2 + 25 x 16(10mm^2)
PE 1x(1x25mm^2 + 25 x 16(10mm^2) in 2 brackets
NORM: IEC/EN 62208, IEC/EN 60670-24
Includes kit for universal installation in a wall, among others, foot metal wall, clip to connect switchgear vertically and horizontally.
Protection degree IP 30, rated voltage 400 V AC
Super-flat steel door. Only 5 mm thickness
Outside dimensions: 358 x 728 x 94 mm

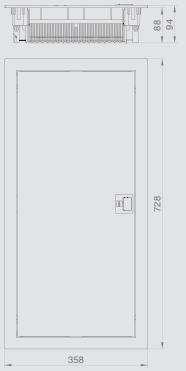

IP 30 | 400 V | STEEL

NEW

MSF TWIN RP 4X12 ELECTRIC + MULTIMEDIA

Type	Color	Pack. 1 pc.	Weight kg/1 pc.	Index
MSF RP 4/56 TWIN	White RAL 9016	1	4,5	**2014-10**

Bracket with terminal equipped:
N 1x(1x25mm^2 + 17 x 16(10mm^2)
PE 1x(1x25mm^2 + 17 x 16(10mm^2) in 2 brackets
NORM: IEC/EN 62208, IEC/EN 60670-24
Includes kit for universal installation in a wall, among others, foot metal wall, clip to connect switchgear vertically and horizontally, mounting plate 2pc., socket 10A/250 1pc. Degree of protection IP 30, rated voltage 400 V AC
Super-flat steel door. Only 5 mm thickness
Outside dimensions: 358 x 728 x 94 mm

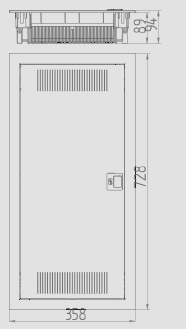

IP 30 | 400 V | STEEL

MSF METAL DOORS ELECTRIC FRAME COMPLETE

Type	Color	Pack. 1 pc.	Weight kg/1 pc.	Index
Door 1x14 steel with frame	White RAL 9016	1	1,25	**2000-01**
Door 2x14 steel with frame			1,5	**2000-02**
Door 3x14 steel with frame			1,8	**2000-03**
Door 4x14 steel with frame			2,1	**2000-04**

NORM: IEC/EN 62208, IEC/EN 60670-24
Protection degree IP 30, rated voltage 400 V AC
Super-flat steel door.
Dimensions: 359 x 464 x 91 mm

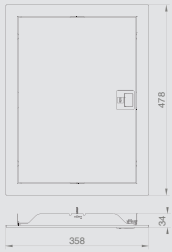

IP 30 | 400 V | STEEL

MSF METAL DOORS MULTIMEDIA FRAME COMPLETE

Type	Color	Pack. 1 pc.	We-ight kg/1 pc.	Index
Door 1x14 MULTIMEDIA steel with frame	White RAL 9016	1	1,25	**2000-11**
Door 2x14 MULTIMEDIA steel with frame			1,50	**2000-12**
Door 3x14 MULTIMEDIA steel with frame			1,78	**2000-13**
Door 4x14 MULTIMEDIA steel with frame			2,0	**2000-14**

NORM: IEC/EN 62208, IEC/EN 60670-24
Protection degree IP 30, rated voltage 400 V AC
Super-flat steel door.
Dimensions: 359 x 464 x 91 mm

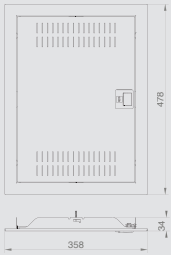

NEW

MSF PATCH-PANEL 18-PORTS STEEL + COVER

Type	Color	Pack. 1 pc.	Weight kg/1 pc.	Index
Patch panel+cover	White RAL 9016	1	-	**2000-48**

For tele-info modules.
MSF patch-panel 18 ports + cover.
Optional socket 230V, the possibility of using F-F sockets, various holes.

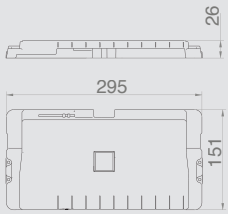

MSF FIXING SET FOR HOLLOW WALLS

Type	Color	Pack. 1 pc.	Weight kg/1 pc.	Index
Fixing kit	White RAL 9016	1	0,03	**2000-00**

This kit allows installation of switchgear MSF in the walls of plasterboard.
Includes 4 pcs of brackets for mounting switchgear.

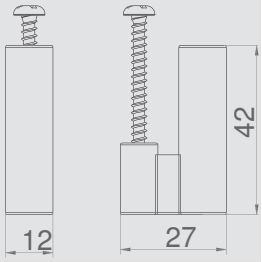

MSF DOOR LOCK METALLIC KEYS

Type	Color	Pack. 1 pc.	Weight kg/1 pc.	Index
Door lock	White RAL 9016	1	0,034	**2000-10**

The lock used to permanently close the cabinet door unauthorized access.

NEW

MSF ROTARY SOCKET 2P+Z 10A/250 V MULTIMEDIA

Type	Color	Pack. 1 pc.	Weight kg/1 pc.	Index
GNT 2P+Z	White RAL 9003	1	0,07	**2000-50**

Rotary socket n/t 2P+Z 10A 250 V.
The ability to rotate 90o
Dimensions: 76x74x43mm

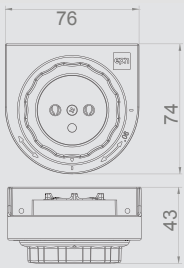

MSF MOUNTING PLATE MICRO-PERFORATED UNIVERSAL 270X124 MM MULTIMEDIA

Type	Color	Pack. 1 pc.	Weight kg/1 pc.	Index
Mounting plate	White RAL 9016	1	0,3	**2000-27**

MSF mounting plate micro-perforated Universal 270x124 mm MULTIMEDIA
Mounting holes Ø 3,2 mm

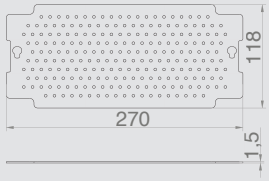

MSF MOUNTING PLATE 2/28 LEVITON MULTIMEDIA

Type	Color	Pack. 1 pc.	Weight kg/1 pc.	Index
Mounting plate	White RAL 9016	1	0,74	**2000-28**

MSF mounting plate 2/28 LEVITON MULTIMEDIA.
Mounting holes Ø 6,3 mm
Plate adapted for mounting a patch panel index: 2000-40

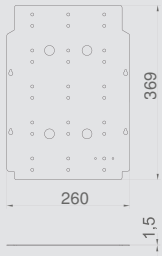

ROUTER

MSF HANDLE METAL DEVICES MULTIMEDIA

Type	Color	Pack. 1 pc.	Weight kg/1 pc.	Index
MSF-Uchwyt	Blue RAL 5005	1	0,12	**2000-32**

MSF handle metal devices MULTIMEDIA: router Wi-Fi, modem.
Requires the use of plates 2000-27.

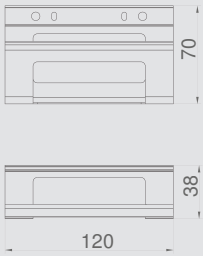

MSF SOCKET N/T 2P+Z 16A MULTIMEDIA

Type	Color	Pack. 1 pc.	Weight kg/1 pc.	Index
GNT 2P+Z	White RAL 9016	1	0,06	**2000-33**

Socket n / t 2P + Z 250V for mounting two additional power supplies in interior switchgear MSF

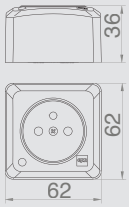

MSF SOCKET N/T 2X2P+Z 16A MULTIMEDIA

Type	Color	Pack. 1 pc.	Weight kg/1 pc.	Index
GNT 2x2P+Z	White RAL 9016	1	0,10	**2000-34**

Socket n / t 2x2P + Z 250V for mounting two additional power supplies in interior switch-gear MSF

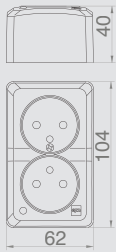

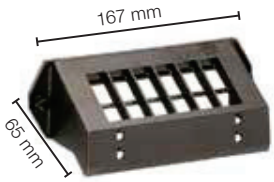

PATCH PANEL 12-PORT MULTIOPERATOR

Type	Color	Pack. 1 pc.	Weight kg/1 pc.	Index
12-ports	Black	1	0,06	**2000-40**

Patch Panel 12-port, mounting on the mounting plate using spinek.Panel contains descriptive labels, it helps to organize installation inside the switchboard MULTIMEDIA.
Easy setup and installation outlets: fiber, Computer-Internet, telephone, cable TV, audio system.
Dimensions: 167x135x65 mm

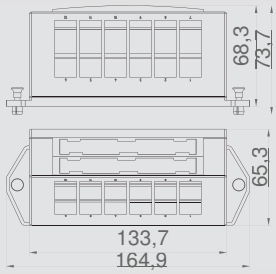

MSF PATCH-PANEL 12-PORT METAL

Type	Color	Pack. 1 pc.	Weigh kg/100 pc.	Index
12-port	Black RAL 9005	1	-	**2000-46**

Patch Panel Port 12 is made of metal, fixing the mounting plate. Easy setup and installation outlets: fiber optics, computer-Internet, telephone, cable TV, audio system. Panel for use also in a series of switchgear ECONOMIC BOX.
Dimensions: 136x75x58mm

MSF PATCH-PANEL 12-PORT EQUIPPED WITH METAL

Type	Color	Pack. 1 pc.	Weigh kg/100 pc.	Index
12-ports	Black RAL 9005	1	-	**2000-47**

Patch Panel Port 12 is made of metal, fixing the mounting plate.
2xSC/APC; 2xRJ45(5e); 2xF-F
Easy setup and installation outlets: fiber optics, computer-Internet, telephone, cable TV, audio system. Panel for use also in a series of switchgear ECONOMIC BOX.
Dimensions: 136x75x58mm

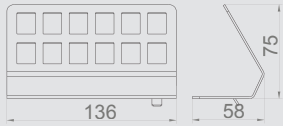

MSF N TERMINAL 5X10 / 16MM2 WITH THE OPTION OF MOUNTING ON TS35

Type	Color	Pack. 1 pc.	Weigh kg/100 pc.	Index
Clamp N	Blue RAL 5005	1	-	**2000-23**

N terminal 5x (+ 2x10mm2 3x16mm2) with the option of mounting on TS35.

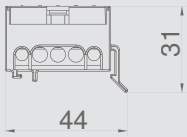

2000-06

TERMINAL TS35

Type	Color	Pack. 1 pc.	Weigh kg/100 pc.	Index
2 x 5 –way	Blue RAL 5005	1	-	**2000-06**
7–way	Blue RAL 5005	1	-	**2000-07**
12–way	Blue RAL 5005	1	-	**2000-08**

Complete terminal block anchored on TH35 rail mounting allows for additional residual current circuit

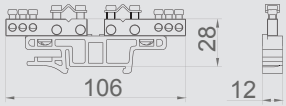

2000-06

MSF BRACKET TERMINAL BLOCKS FROM L4 TO L26.

Type	Color	Pack. 1 pc.	Weight kg/1 pc.	Index
Bracket	Blue RAL 5005	1	0,04	**2000-22**

Bracket terminal blocks from L4 to L26.
Complete overlay assay autopsy.

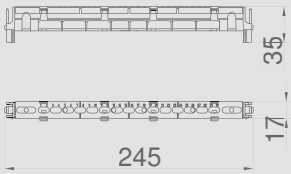

2000-16

MSF BRASS STRIP

Type	Pack. 1 pc.	Weigh kg/100 pc.	Index
L-5	1	-	**2000-16**
L-7	1	-	**2000-17**
L-15	1	-	**2000-18**
L-18	1	-	**2000-19**
L-23	1	-	**2000-20**
L-26	1	-	**2000-21**

Brass strip adapted for m 2000-16 ounting on a support.

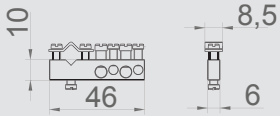

2000-16

MSF COMPLETE HANDLE WITH THE HANDLE / WITHOUT KEY

Type	Color	Pack. 1 pc.	Weight kg/1 pc.	Index
Handle	White RAL 9016	1	0,03	**2000-24**

Spare part - complete handle with the handle / without key / used for destruction or loss, originally supplied with the switchgear

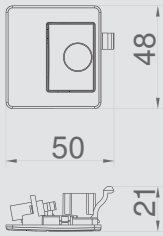

MSF COMPLETE GROMMET

Type	Color	Pack. 1 pc.	Weight kg/1 pc.	Index
Grommet	Szary RAL 9035	1	0,08	**2000-25**

Spare part - Complete grommet with screws for entering Wiring used in casing of loss originally supplied with the switchgear

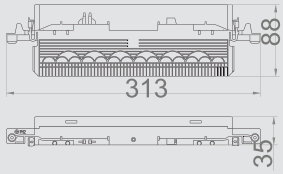

MSF HINGES WITH METAL AXLE RIGHT AND LEFT

Type	Color	Pack. 1 pc.	Weight kg/1 pc.	Index
MSF hinges	White RAL 9016	2	0,09	**2000-26**

MSF hinges with metal axle right and left the door assembly

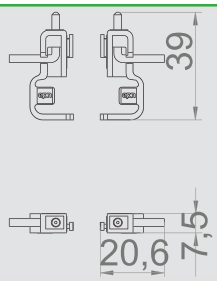

MSF RAIL 14 MOD TS35

Type	Color	Pack. 1 pc.	Weight kg/1 pc.	Index
TS 35	-	1	0,89	**2000-29**

MSF rail 14 mod TS35

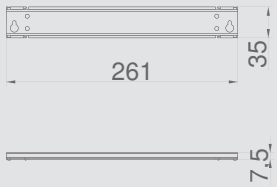

MSF PAW MOUNTING TO THE WALL SET. 4 PCS.

Type	Color	Pack. 1 pc.	Weight kg/1 pc.	Index
Paw mounting	-	4	0,92	**2000-30**

MSF paw mounting to the wall set. 4 pcs.

MSF METAL FASTENERS FOR CONNECTING SWITCHGEAR 2PCS.

Type	Color	Pack. 1 pc.	Weight kg/1 pc.	Index
MSF fasteners	-	2	0,03	**2000-31**

Metal fasteners for connecting switchgear MSF vertically or horizontally

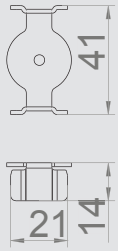

MSF ADAPTER FOR TS35 SOCKETS FOR (45X45) ON 2-MOD MULTIMEDIA

Type	Color	Pack. 1 pc.	Weight kg/1 pc.	Index
MSF Adapter	White RAL 9016	1	0,024	**2000-36**

Adapter for DIN sockets 2M 22,5x45 (45x45) and computer power

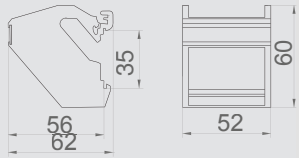

MSF ADAPTER FOR TS35 SOCKETS FOR (45X45) ON 2-MOD MULTIMEDIA

Type	Color	Pack. 1 pc.	Weight kg/1 pc.	Index
MSF 2P+Z	White RAL 9016	1	0,03	**2000-42**

Adapter for DIN sockets 2M 22,5x45 (45x45) and computer power

MSF ADAPTER SLOTS TELEINF 1-MOD 22,5X45 MM KEYSTONE JACKS TYPE MULTIMEDIA

Type	Color	Pack. 1 pc.	Weight kg/1 pc.	Index
MSF Adapter	White RAL 9016	1	0,016	**2000-37**

MSF adapter slots keystone jacks

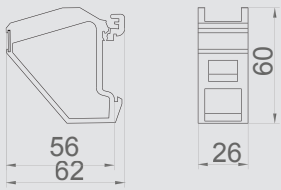

MSF ADAPTER SLOTS TELEINF 1-MOD 22,5X45 MM KEYSTONE JACKS TYPE MULTIMEDIA

Type	Color	Pack. 1 pc.	Weight kg/1 pc.	Index
MSF Adapter	White RAL 9016	1	0,008	**2000-38**

1-mod adapter straight 22,5x45mm for 1xRJ45 or 1xRJ 12

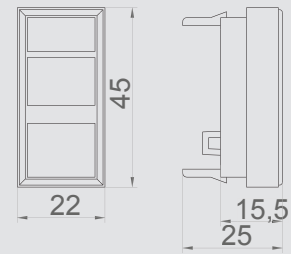

MSF ADAPTER SLOTS TELEINF 1-MOD 22,5X45 MM FOR RJ45 CAT 6A TOOLING. TYPE MULTIMEDIA

Type	Color	Pack. 1 pc.	Weight kg/1 pc.	Index
MSF Adapter	White RAL 9016	1	0,008	**2000-39**
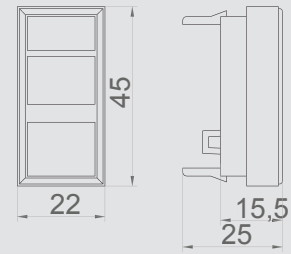
1-mod adapter straight 22,5x45mm for 1xRJ45 or 1xRJ 12 for socets cat. 6A tooling